FURUNO

INSTALLATION MANUAL

DOPPLER SONAR CURRENT INDICATOR

MODEL CI-80

FURUNO ELECTRIC CO., LTD.
NISHINOMIYA, JAPAN

9-52, Ashihara-cho,
Nishinomiya, Japan

Telephone: 0798-65-2111
Telefax: 0798-65-4200

•Your Local Agent/Dealer

 Printed in Japan

FIRST EDITION : MAR. 2000
F : DEC. 22, 2000

PUB. No. IME-72390-F
CI-80
(DAMI)

* 00080736200 *

⚠ SAFETY INSTRUCTIONS

⚠ DANGER

Do not open the equipment.

Hazardous voltage which will cause death or serious injury exists inside the equipment. Only qualified personnel should work inside the equipment.

⚠ WARNING

Do not disassemble or modify the equipment.

Fire, electrical shock or serious injury can result.

Turn off the power immediately if water leaks into the equipment or the equipment is emitting smoke or fire.

Continued use of the equipment can cause fire or electrical shock.

Do not place liquid-filled containers on the top of the equipment.

Fire or electrical shock can result if a liquid spills into the equipment.

Do not operate the equipment with wet hands.

Electrical shock can result.

Keep heater away from equipment.

Heat can alter equipment shape and melt the power cord, which can cause fire or electrical shock.

⚠ CAUTION

Use the proper fuse.

Use of a wrong fuse can result in fire or permanent equipment damage.

Do not use the equipment for other than its intended purpose.

Personal injury can result if the equipment is used as a chair or stepping stool, for example.

Do not place objects on the top of the equipment.

The equipment can overheat or personal injury can result if the object falls.

TABLE OF CONTENTS

CHAPTER 1 GENERAL DESCRIPTION ____ 1

1.1 Selection of Installation Site ---- 1
1.2 Grounding ---- 3

CHAPTER 2 MOUNTING ____ 4

2.1 Display Unit ---- 4
2.2 Transceiver Unit ---- 4
2.3 Hull (Transducer) Unit ---- 5

CHAPTER 3 CONNECTIONS ____ 7

CHAPTER 4 POST-INSTALLATION CHECK AND ADJUSTMENT ____ 8

4.1 Line Voltage Check ---- 8
4.2 DIP Switch Setting ---- 10
4.3 Jumper Wire Selection ---- 11
4.4 System Diagnosis ---- 11
4.5 TX Output Check ---- 11
4.6 Calibrations ---- 12
4.7 External Noise and Interference Check ---- 12
4.8 Sea Trial Check ---- 16

CHAPTER 1 GENERAL DESCRIPTION

The Doppler Sonar Current Indicator CI-80 consists of a Display Unit, a Transceiver Unit and a Hull (Transducer) Unit. The gyro signal is applied to the transceiver unit via an A-D converter. The equipment can output ship's speed and true bearing data to a radar or scanning sonar for true-motion display. Further, current data can be output to an echo sounder or scanning sonar in CIF format.

To obtain full performance from the equipment, the installation of the units, especially the hull unit, is very important. Poor siting of units or poor cable layout may cause pick-up of noise, or give interference to other units. This chapter presents an overview of how to install the equipment.

1.1 Selection of Installation Site

Hull (Transducer) Unit

The performance of the equipment largely depends on the installation of the transducer unit, and a very important consideration is the installation site. They should meet the following requirements.

a) Projections (such as sonar's retraction tank) should not exist in the area shown by oblique lines in Fig. 1-1.

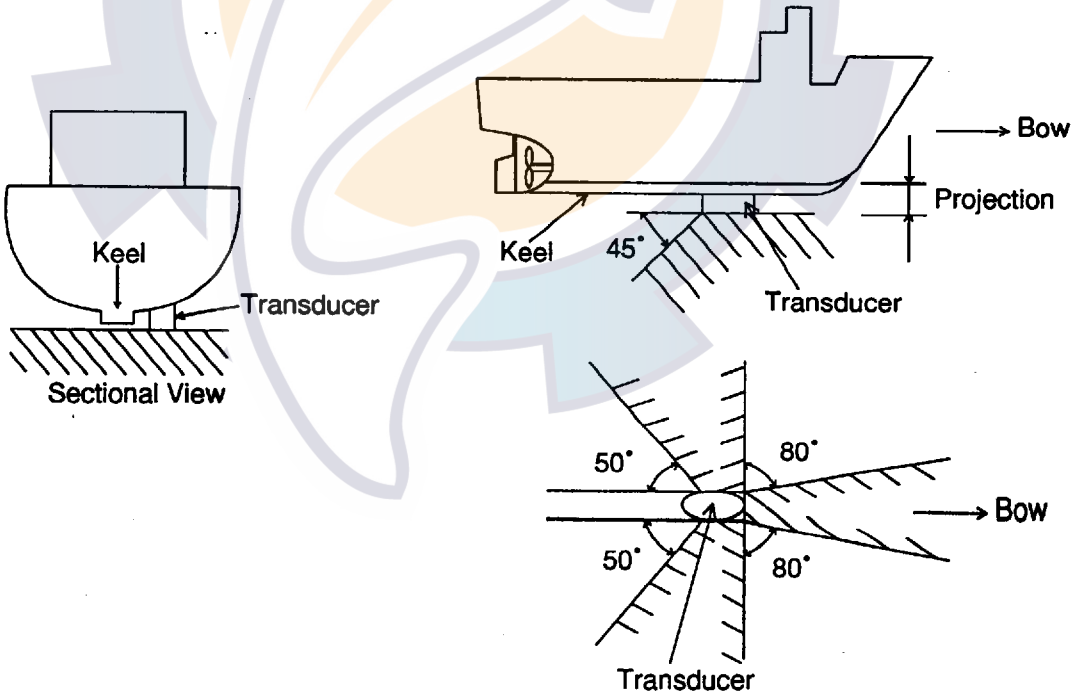

Fig. 1-1 Transducer Unit Installation Site

b) Mount the transducer between one-third and one-half of the ship's full length (measuring from the bow). Select the place where the transducer is free from the effects of air bubbles. The transducer face should not be above the sea surface when the ship is pitching or rolling.

c) In general, the air bubbles produced at the bow flow backward alongside the keel. Therefore, separate the transducer more than 1000 mm from the keel, or flush mount the transducer inside the keel.

d) The surface of the transducer should project by 250 mm or more from the hull bottom. For better performance, its surface should be even with the keel's lowest point or below it.

e) The following is important for preventing interference between the CI-80 and other equipment(s). If the transducer of an echo sounder or scanning sonar whose harmonic is within the frequency range of 288 ± 8 kHz is mounted, interference may occur. Even if the harmonic is out of the range, the risk of interference still exists if the transducer of the CI-80 and other equipment(s) are mounted near one another. For this reason, separate the transducer of the CI-80 as far as practical from other equipments which have high output power. If interference is unavoidable due to limited mounting space, connect the interfering equipment to the built-in interference rejector circuit (two inputs) in the transceiver unit. For connection to this circuit, you will need to run a two core cable between it and the interfering equipment(s).

f) Make the transducer cable as short as possible. The cable is generally installed in grounded steel conduit run between the transducer and the junction box, to prevent pick-up of noise. The transducer with 20 m transducer cable can be used only when it is passed inside conduit.

Note 1: For flush mounting, provision must be made to allow water to flow inside the transducer to keep it cool.

Note 2: Before installing the hull (transducer) unit, discussion should take place and agreement be reached with the shipyard for sufficient reinforcement and watertightness of the hull to comply with the regulations concerned.

1.2 Grounding

This equipment uses pulse signals which may give interference to other electronic equipment such as a direction finder and radio receiver, if it is not grounded properly. Accordingly, ground all cables referring to the guidelines below.

- Separate all units as far as possible from radio equipment.
- Do not run interconnection cables close to or near radio equipment or its cables.
- Run the cables in the shortest path practical.
- Lay the cables on grounded copper plate and fix them every 30 cm with metal fixing bands.
- Ground all units with a copper strap.
- To join copper straps, use solder cream for perfect contact.

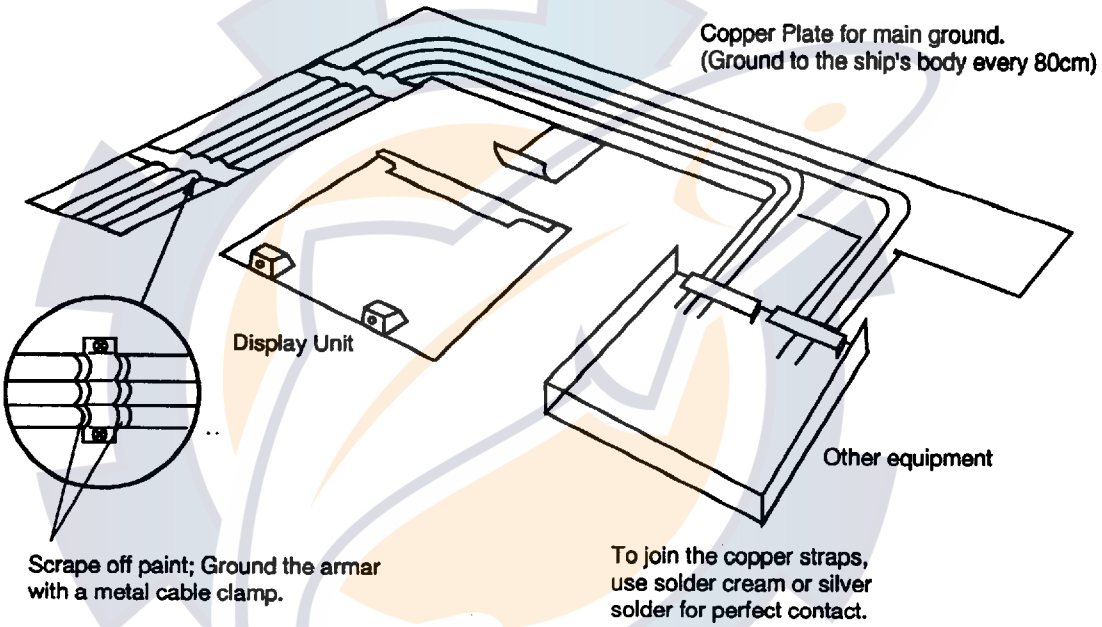

Fig. 1-2 Grounding Method

CHAPTER 2 MOUNTING

2.1 Display Unit

Mounting Considerations

The display unit is designed for tabletop mounting. It can be installed almost anywhere, provided the following conditions are met.

1) Select a place where controls can be easily operated while observing fishing ground or the area around the vessel.
2) Locate the unit at least 1 m from magnetic devices (radar magnetron, loudspeaker, high power transformer, etc.) and magnetic compass.
3) Keep the unit out of direct sunlight, water splashes and hot air.
4) Secure enough space around the unit for maintenance, checking and ventilation, referring to the outline drawings.
5) Select a place where the CRT face is within ±45° from vertical.

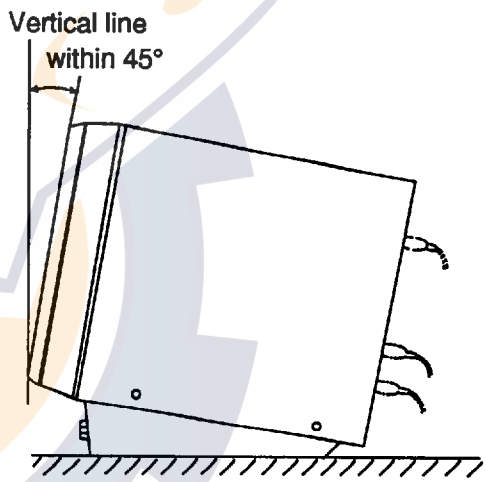

Fig. 2-1 Display Unit

Procedure

1. Remove the mounting base from the display unit by loosening the two bolts at the front of the display unit.
2. Fix the mounting base to the choosen location with four woodscrews (ϕ10 x 25)or four bolts (M10).
3. Fix the display unit to the mounting base with the two bolts removed in step 1.

2.2 Transceiver Unit

Mounting Considerations

1) Since the transceiver unit generates heat, install it in a dry, well-ventilated place. The cooling fans at the top of the unit must not be obstructed to allow heat to escape.
2) This unit is designed for bulkhead mounting to permit dissipation of heat. If bulkhead mounting is absolutely impossible, mount the unit on the floor leaving at least 50 mm clearance between it and the floor to permit dissipation of heat.
3) The unit weight 16 kg. Reinforce the mounting area, if necessary.
4) Leave space around the unit for maintenance and checking. Refer to the outline drawing.

Procedure

1. Fix 4 bolts (M10) to the bulkhead so their ends are exposed by about 20 mm. Attach a nut to each bolt to provide clearance between the rear panel of the unit and the bulkhead to prevent warpage of the rear panel. If it warps, it may be impossible to remove the power block in the transceiver unit.
2. Place the transceiver unit on the bulkhead and fix it with nuts.

2.3 Hull (Transducer) Unit

Steel Hull Vessels

1. Select a mounting place on the hull bottom, referring to chapter 1. (Since the transducer cable is large in diameter, select a mounting place for the thru-hull pipe where the cable can be easily led into the cable gland.)
2. If necessary, weld a doubling plate (shipyard supply) to the hull bottom.
3. Unpack the transducer casing and determine the projecting length, making it 250 mm or more. Before cutting the casing, confirm that the transducer casing has "direction". Then, cut it considering the rising angle of the ship's hull. Weld the casing in parallel with ship's fore-aft line with an accuracy of better than ±1°. The transducer face should be horizontal at cruising speed.
4. Make a hole for the thru-hull pipe in the hull bottom. Before welding the thru-hull pipe, remove the rubber packing from the thru-hull pipe. Weld the thru-hull pipe. Replace the rubber packing.
5. Make a hole of 10 to 20 mm diameter on the stern side of the casing to allow water to penetrate the transducer casing.
6. Weld the casing to the hull bottom. Do not remove the transducer fixing flange to prevent the casing from being deformed.
7. Dismount the fixing flange from the casing. Fix the transducer to the fixing flange.
8. Pass the transducer cable through the thru-hull pipe. Tighten the cable gland, leaving the cable about 0.5 to 1 m below the cable gland.
9. Mount the fixing flange with the transducer onto the casing. Take care not to pinch the transducer cable. Never hold the transducer by the cable. Shock will most assuredly damage the transducer.

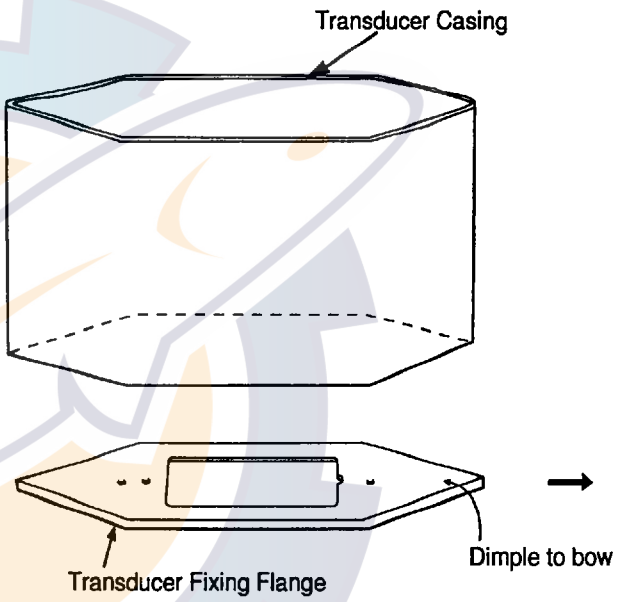

Fig. 2-2 Fixing Transducer Casing

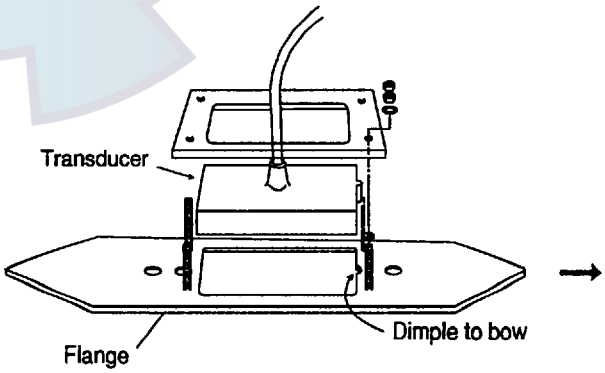

Fig. 2-3

FRP Hull Vessels (Hull Installation)

1. Select a mounting place on the hull bottom, referring to chapter 1. (Since the transducer cable is large in diameter, select a mounting place for the thru-hull pipe where the cable can be easily led into the cable gland.)
2. Determine the projecting length of the casing, making it at least 250 mm. Cut the casing, considering the rising angle of the ship's hull, so that the transducer face is horizontal. The casing should be parallel with ship's fore-aft line within ±1°, and the transducer face should be horizontal at cruising speed.
3. Make a hole of 10 to 20 mm in diameter on the stern side of the casing to allow water to penetrate the transducer casing.
4. Make a hole for the thru-hull pipe on the hull bottom. Allow enough clearance around the pipe for easy tightening of lock nuts.(See page D-5)
5. Fix the thru-hull pipe on both sides of the hull plate with FRP molding.
6. Before fixing the casing to the hull bottom, clean the hull plate surface with an electric sander until fiberglass appears, then remove dusts, oils, etc. from surface. Reinforce both sides of the casing with FRP molding.
7. Fix the transducer to the fixing flange.
8. Pass the transducer cable through the thru-hull pipe. Tigthen the cable gland, leaving the cable about 0.5 to 1 m below the cable gland.
9. Fix the fixing flange with the transducer to the casing. Take care not to pinch the transducer cable.

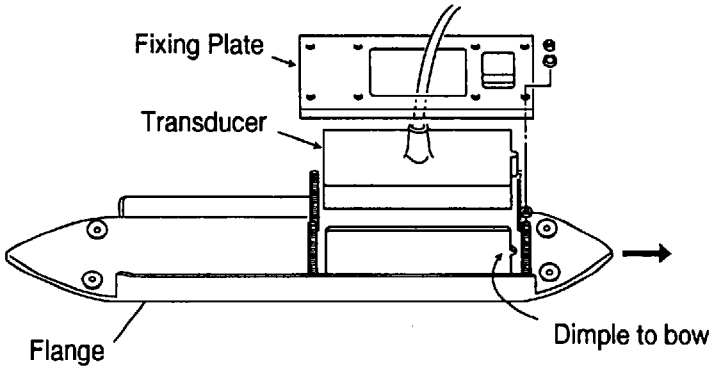

Fig. 2-4

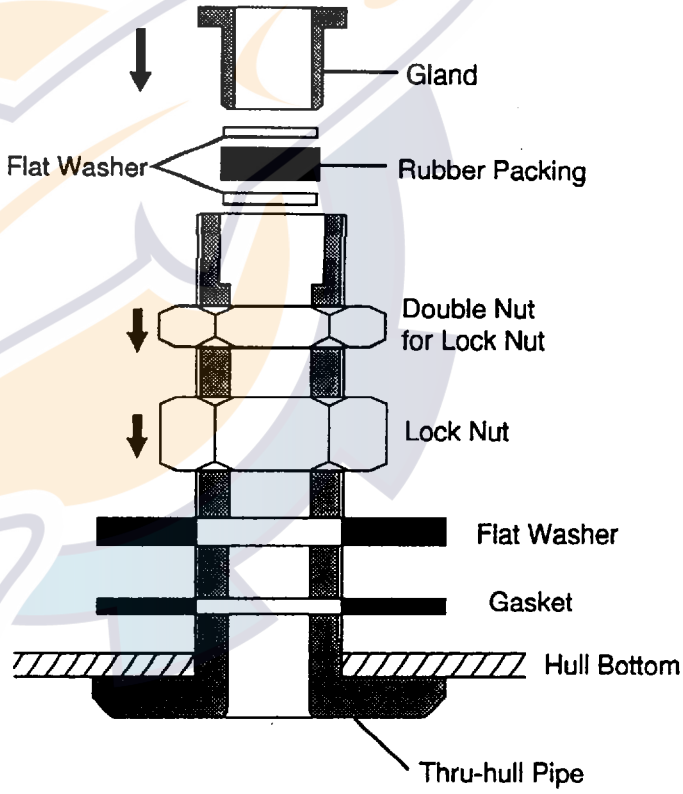

Fig. 2-5

FRP Hull Vessels (Keel Installation)

Refer to the outline drawing.

CHAPTER 3 CONNECTIONS

Connect the cables by referring to the interconnection diagram (page S-1). The shield should be grounded through the connector clamp. A ground lead wire is soldered to the shealds of the transducer cable. When soldering ship's mains to the POWER connector, observe the polarity; pin #1 is positive and pin #2 is negative.

CAUTION : Wrong connection of the transducer cable can damage the transducer thermal sensor and/or the STXA board.

Each unit should be effectively grounded with a copper strap 50mm width. An earth stud with wing nuts are provided on the unit. See outlint drawing.

CHAPTER 4 POST-INSTALLATION CHECK AND ADJUSTMENT

4.1 Line Voltage Check

Transceiver Unit

1. Unfasten the four screws on the power block .
2. Pull the block forward to access to the test points.
3. Turn the power switch on., and the MAIN lamp lights.

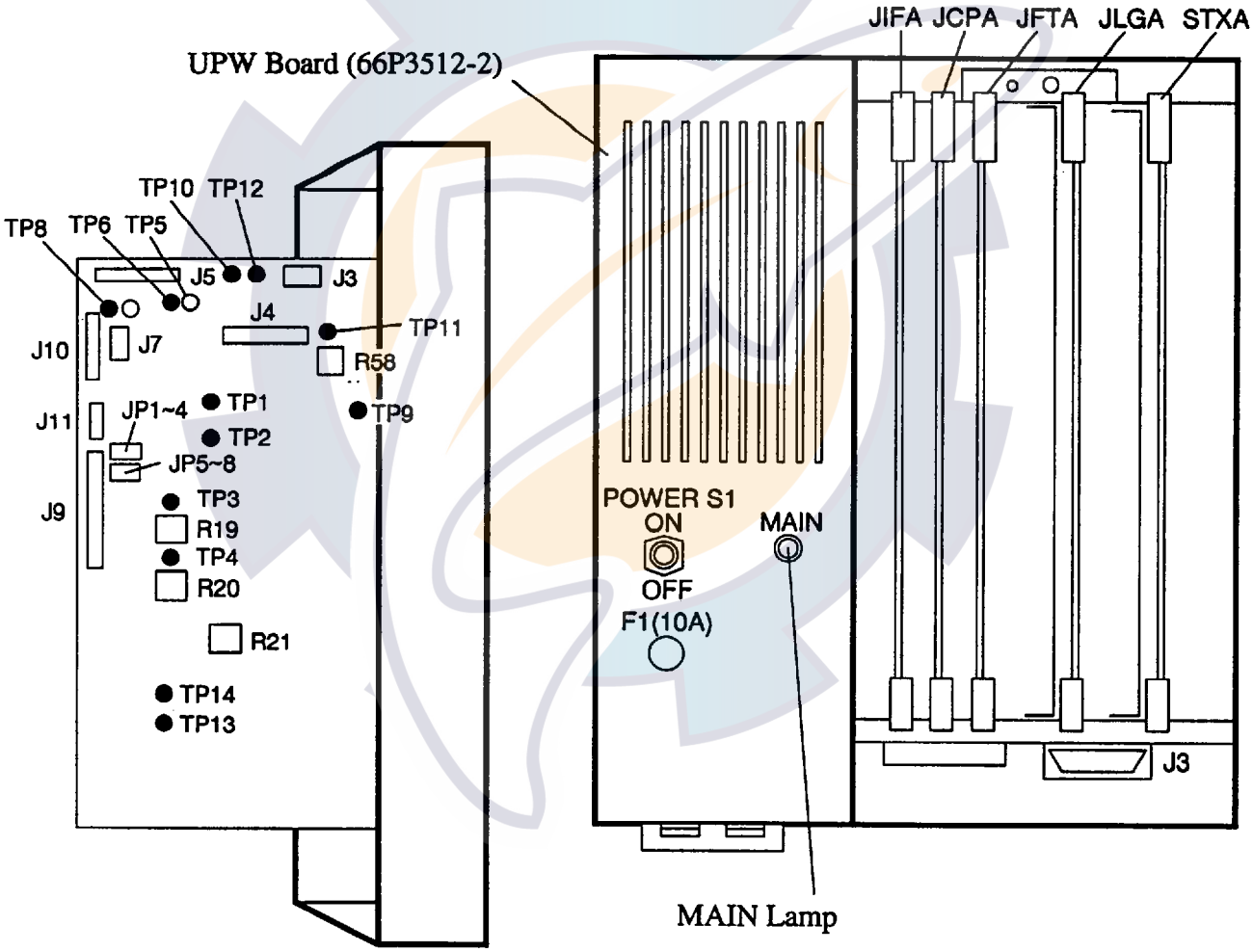

Fig. 4-1 Transceiver Unit

4. Measure each line voltages. (TP5:GND)
   TP10: 5.1 to 5.3Vdc; TP11: 12.1 to 12.3Vdc; TP12: -11.1 to -12.3Vdc; TP9: 65 to 85Vdc
5. After turning off the power, fix the power block to the main chassis.

Display Unit

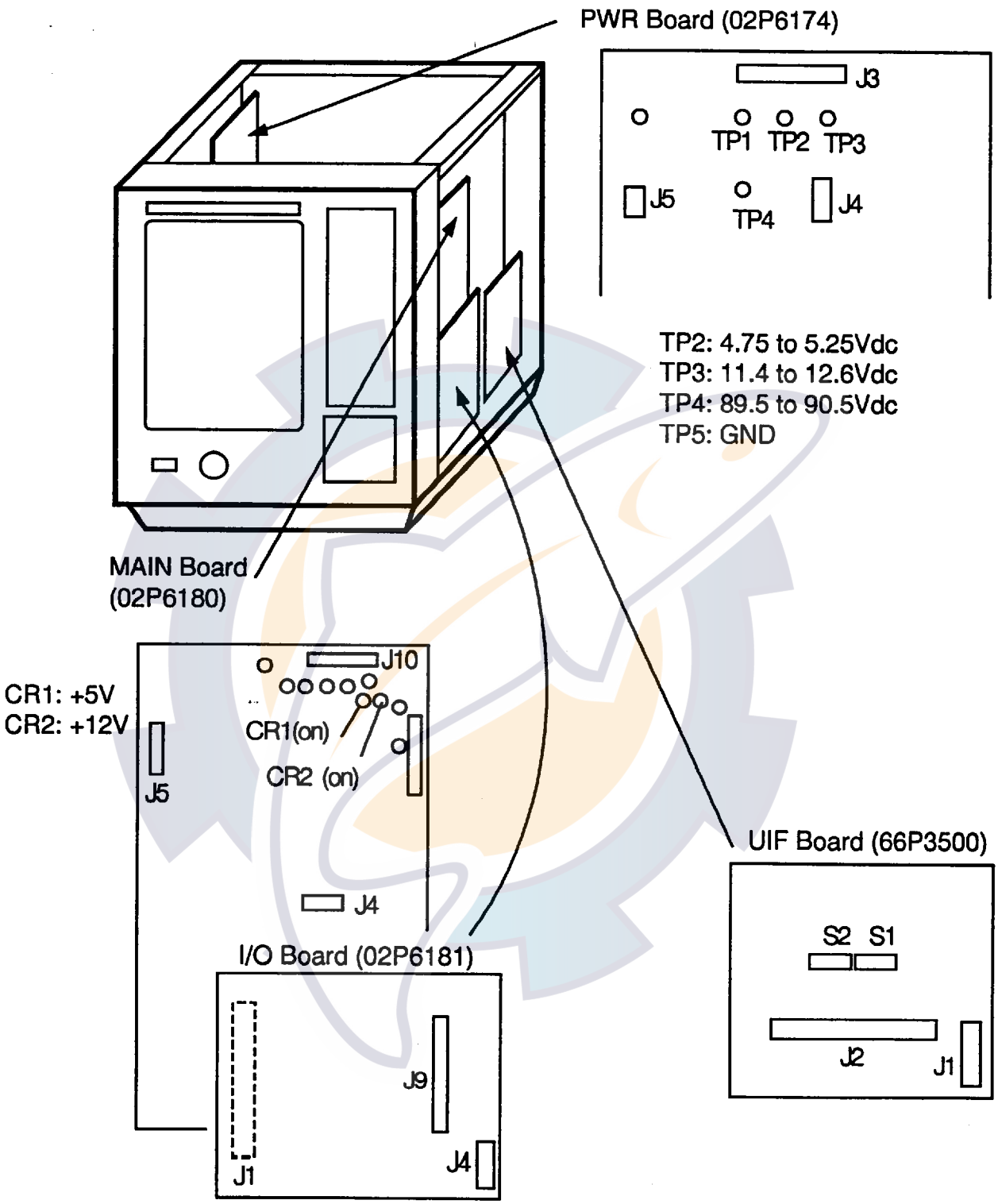

Fig. 4-2 Display Unit

1. Remove the cover from the display unit.
2. Turn the power switch on. Confirm that CR1 (+5V) and CR2 (+12V) LEDs on the MAIN Board light.
3. Confirm the voltage at the following points.

4.2 DIP Switch Setting

Display unit (CI-800)

S2 on the UIF Board (66P3500) chooses nav data source and indication formats.

Nav data

Set according to navigator connected to the CI-80. When connecting a hybrid navigator (to the interface unit) choose “AUTO” to select navigator from highest priority to lowest priority. GPS is the highest, Loran A is the lowest.

GPS: GPS navigator
LC: Loran C navigator
DC: Decca navigator
DR: Dead Reckoning
LA: Loran A navigator

Note: For DR and LA data the GPS or Loran C data is used and converted to “simulated” DR or LA data. Accordingly the tide processor cannot use dead reckoning or LA data.

Indications format

Set indication formats for the following items.

Bearing: 32-point (OFF), 360 degree (ON)
Speed: kt (OFF), km (ON)
Range: nm (OFF), km (ON)
Current vector: Flowing to (OFF), Flowing from (ON)
CIF/NMEA: CIF (OFF), NMEA 0183 (ON)

Transceiver unit (CI-810)

S6 on the JCPA Board (66P3205) turns activates/deactivates the tide processor, and the default setting is ON. When no navigator is connected turn off S6; the tide processor does not work without a navigator.

4.3 Jumper Wire Selection

Log pulse rate, 200 or 400 pulse/nm is selected by changing a jumper wire on the UPW Board.

Log No.	200 pulse/nm	400 pulse/nm
Log 1	JP1: short, JP2 to JP4: cut	JP3: short; JP1, JP2 and JP4: cut
Log 2	JP5: short, JP6 to JP8: cut	JP7: short, JP5, JP6 and JP8: cut

4.4 System Diagnosis

Conduct the diagnostic check referring to the operator's manual.

4.5 Output Check

Tx output voltage can be checked by using the echo-test function or self-test menu. The check must be carried out on three beams.

Echo test

1. Press the DISP MODE key to select the echo display.
2. While pressing and holding down the TRIP key, press the MENU key. The system display appears.
3. Press the ◄ or ► key to select the MODE menu.
4. Press the ⇧ or ⇩ key to select SELF TEST.
5. Press the ⇦ or ⇨ key to select ECHO.
6. Press the EVENT key to start the echo test.

Voltage check

1. Measure voltage of beams 1, 2 and 3. The voltage should be 92 – 98 V.
2. If beam Tx output voltage is abnormal, check voltage between TP1-TP2, TP3-TP4 and TP5-TP6 on the STXA Board. The normal voltage is 100 Vp-p. If the voltage is abnormal replace the STXA board.
3. Confirm that +B voltage is 135 ±25. If it is abnormal check Tx voltage on the UPW Board. If it is abnormal, replace the UPW Board.
4. Recheck voltage on the STXA Board. If voltage is abnormal replace the board.

4.6 Calibrations

Call up the system menu for calibration, referring to page 17 of the operator's manual.

GT SPD CALIB (-12.8 to 12.7%)

Calibrates ship's speed in the ground tracking mode. True speed should be calculated at the sea trial. Increase the value when the ground tracking speed is slower than ship's speed readout. Calibration value may be calculated as follows:

Calibration value = {True speed – (CI-80/G Speed9)}/True speed X 100

WT SPD CALIB 8-12.8 to 12.7%)

Calibrates ship's speed in the water tracking mode. Raise the setting when the water tracking speed is slower than the ship's speed readout. Generally, enter the same value as for the GT SPD CALIB.

DRAFT LEVEL (0.0 to 50.0 m)

Sets the depth of the transducer from the sea surface.

BEARING CALIB (-12.8 to 12.7%)

Compensates for bearing error in relation to the ship's bow.

COURSE CALIB (-12.8 to 12.7%)

Compensates for course error. Adjust the setting when the course obtained in the ground tracking mode is different from that obtained from a navigator (GPS).

4.7 External Noise and Interference Check

External noise check

Noise level can be measured at the echo check screen. It is not necessary to transmit to conduct the check.

Preparation

1. Disconnect the plug P3 from the UPW Board in the power block of the transceiver unit to disconnect the +B line.
2. Execute the echo check through the self-test menu.
3. Set the ECHO DEPTH to maximum (50 m) by pressing the ⇧ key.

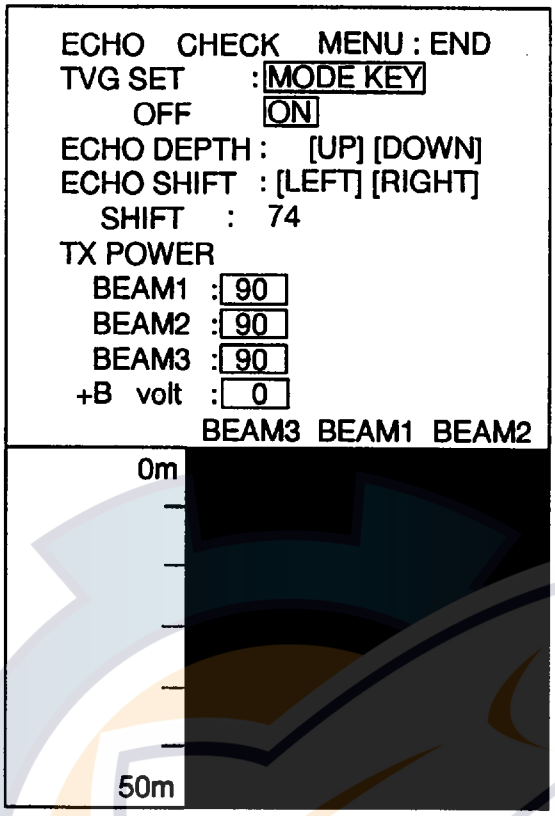

Fig. 4-3 Echo Test Screen

Check at mooring

4. Adjust the ECHO SHIFT by pressing the left/right arrow key so that the color of echograms changes from light-blue to blue (back color).
5. Read the "SHIF" value: The value should be 74 or higher at normal noise level. If the value is less than 74, noise is excessive.

Check at cruising

6. With the SHIF value unchanged, cruise the boat outside the harbour.
7. Increase the ship's speed observing the echogram. The echogram is presented in 8 color gradations. Twice the input level means the one gradation higher color of the echogram. The color will change in the following order when the input level is increased.

   blue (lowest) ⇨light-blue⇨cyan⇨ green ⇨orange ⇨vermilion ⇨red ⇨brown (highest)

8. Confirm that the noise levels are almost even on all three beams and pulse-like periodic noise does not appear.
9. If the color changes by more than 3 gradations than that at mooring, the noise level is excessive. In this case check the ground of each unit. (If the cruising noise is too heavy, you must consider the transducer relocation or reshaping.)

Interference Check

Perform this check where the depth is greater than 50 meters (preferable about 100 meters) and there are no other ships.

10. Set the ECHO SHIFT level to the value where the echogram color changes from blue to black.
11. Locate the ship outside the harbour.
12. Observing the echo check screen, turn on all ultrasonic wave generating equipments such as the echo sounder and sonar one by one. If noise is generated the screen will look like the following.

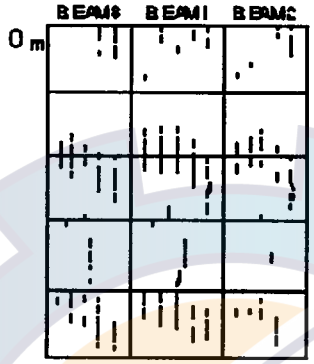

Fig. 4-4

13. Turn off all ultrasonic wave generating equipments.
14. Connect P3 on the UPW board and operate the CI-80 in the ground tracking mode.
15. Check for correct current indiction.
16. Observing the current indication, turn on all ultrasonic wave generating equipments one by one with their output power and pulse length set at the maximum. For the sonar, change the tilt and train angles. If the current reading changes abnormally, the ultrasonic wave generating equipment interferes with the CI-80.
17. If necessary, reduce the interference with the built-in interference rejector in the transceiver unit. See the next page.

Note: Use of the Interference Rejector reduces the response against the change of tidal speed.

Interference Rejection

Two interference rejectors are available in the transceiver unit.

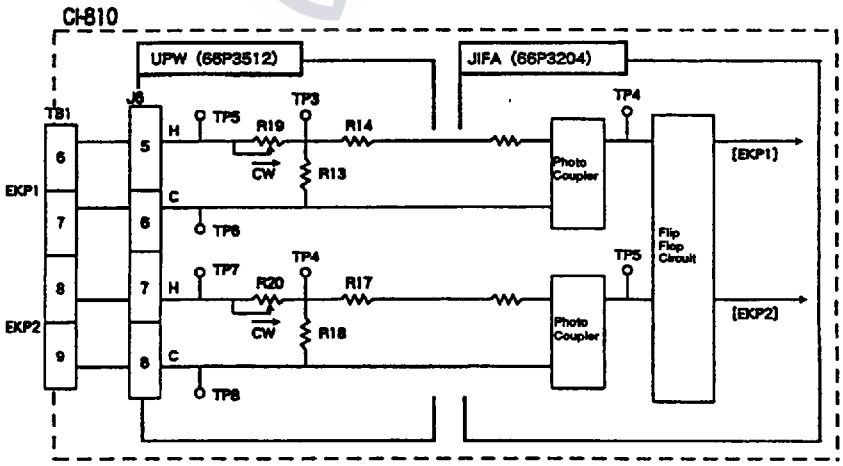

Fig. 4-5

The rejector needs the keying pulse (KP) from the other equipment which interferes with the CI-80. The KP required is as follows.

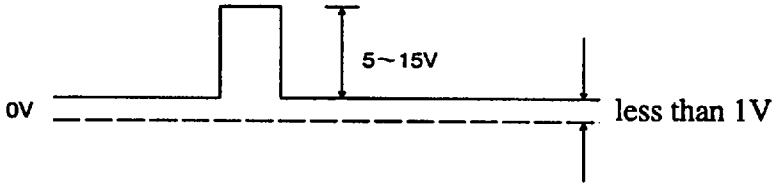

Fig. 4-6 Keying Pulse (KP) required

An additional circuit is used if the above KP signal is not available. The followings show the example of buffer circuits.

- Buffer circuit for positive-going KP

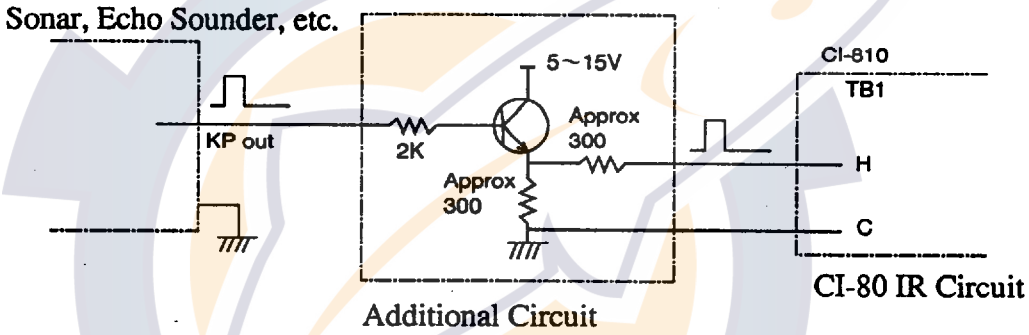

- Buffer circuit for negative-going KP

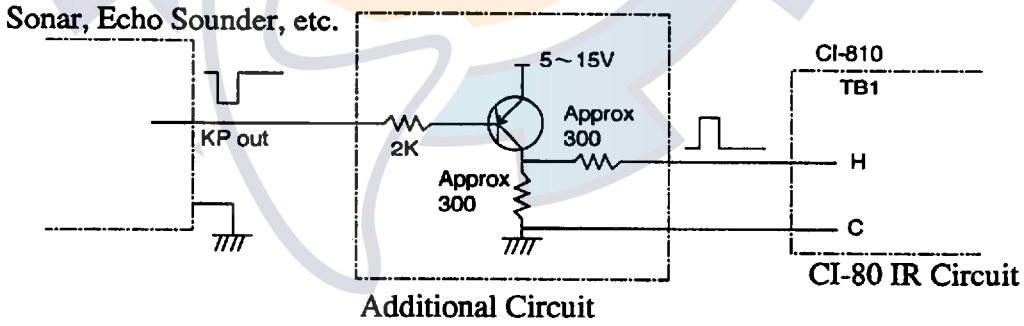

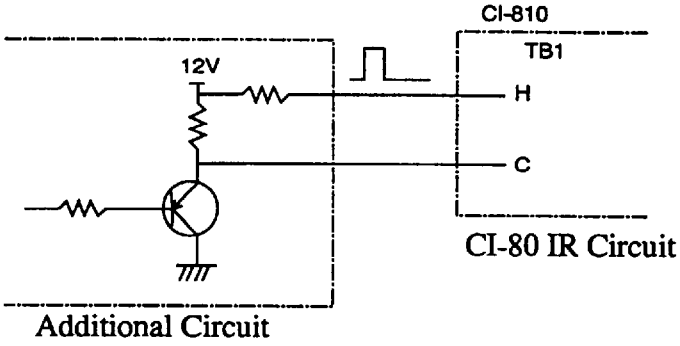

Fig. 4-7 Buffer Circuit for Keying Pulse (KP)

DIP Switch Setting

Set the switch S3 on the JIFA Board (66P3204) as follows.

a) When a KP is connected to EX KP (1) of TB1, set S3-#3 on the JIFA board 66P3204 to ON.
b) W hen a KP is connected to EX KP (2) of TB1, set S3-#4 on the JIFA board 66P3204 to ON.

Adjustment

Adjust variable resistors R19 and R20 on the UPW Board;

a) When KP is fed to EX KP1, turn R19 CW so that the KP is amplified to +5V. And then turn R19 CW by one click.
b) When KP is fed to EX KP2, turn R20 CW so that the KP is amplified to +5V. And then turn R19 CW by one click.

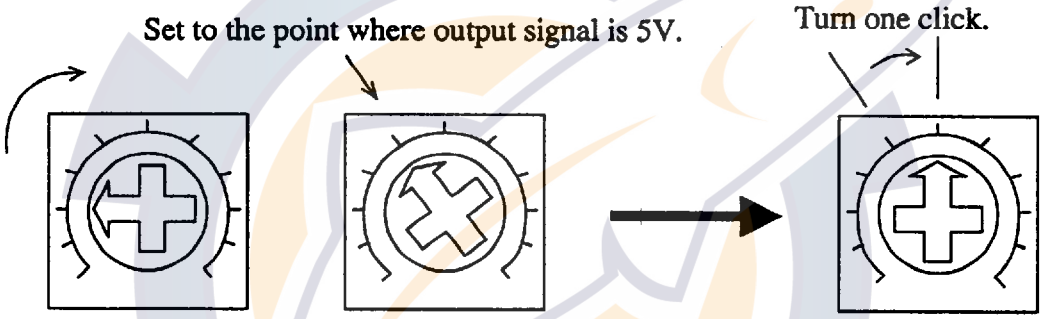

Fig. 4-8

4.8 Sea Trial Check

Ship's Speed Test

Do the milepost test where ground tracking measurement can be done.

1. Reset the distance run at the moment the milepost test is initiated.
2. Read the distance run at the moment the milepost test is completed.
3. Calculate true ship's speed from the data of the milepost test and ship's speed of the CI-80 from that of the distance run.
4. If the error is more than ± (1% + 0.1 kt), correct it on the calibration menu (system menu). Record the data in Table 1.
5. Repeat the milepost test several times, and confirm that the error is within ± (1% + 0.1 kt).
6. Record the ship's speed every 10 seconds in table 2.
7. Calculate the average ship's speed from the data in the table 2 to compute unit accuracy.

Current Information Check

Confirm that current speed/direction display is uniform in all directions and does not change whatever the ship's heading. Use the ground tracking mode to record the data.

* Before beginning this test, set TIDE AVERAGE to 2 minutes and TIDE HISTORY to 15 seconds at menu 1.
* At sea trial, the ship's draft is shallow due to no "load", so air bubbles may affect equipment performance.

1. Run your boat at a speed around 12 kts, following square course shown below. Each side of the square is about 1 mile in length. It should take about 5 minutes to cover one side of the course. After completing a side of the course, turn, wait for course to stabilize, then run straight for five minutes.

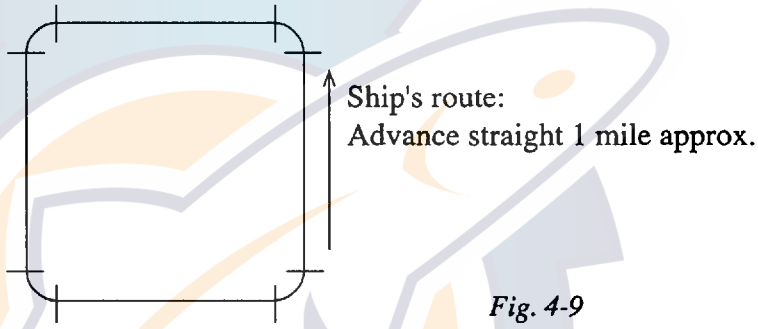

Fig. 4-9

2. Record the ship's speed and tide data every 30 seconds in table 3. As a general rule, set the Mode to North Up. Only when there is no gyro signal should the data be recorded using the Heading Up Mode. If a wind meter is available, record the speed and direction of the wind.
3. On a separate of paper, plot the current speed and direction. Confirm the current reading is stable in any ship's heading.

Instead of plotting on paper, you may use the tide history function of CI-80. Just after completion of test route, press the [HISTORY] key and observe the tide history. If it is working normally, the tide vectors should point almost constant direction.

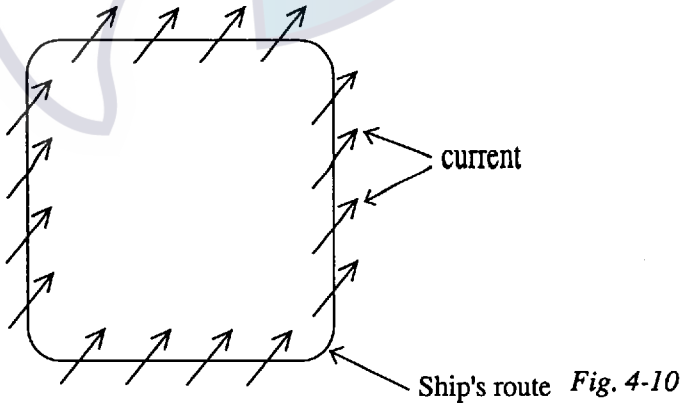

Fig. 4-10

Note 1: When a "bearing sensor" is connected in lieu of a gyrocompass, accurate measurement of current direction is no expected because the bearing data itself is in error.

Note 2: Because current speed/direction differ with season, sea area, and time of day, be sure to look at the entire data rather than just portions of it.

Table 1 Ship's Speed Test

SHIP'S NAME__________ TEST SITE__________ SHIP'S LENGTH_______(m) DRAFT Fore______ Aft______ Mean______ (m)

DATE	TIME	ENGINE		*1 MILEPOST		Current Indication				EM-LOG (kts)	DEPTH (m)	COURSE (Deg)	WIND (m/s)	SEA COND.	CUR-RENT (kts)	REMARKS
		OUTPUT	RPM	(kts)	TIME(s)	SPEED (kts)	*3 DIST. RUN		*2 ERR. (%)							
							(kts)	TIME(s)								
AVG.																
AVG.																
AVG.																
																MEASURING MODE GROUND WATER
AVG.																
AVG.																

*1 Milepost miles

$$*2\ \text{Error} = \frac{\text{Speed measured by milepost} - \text{Current Indicator Speed}}{\text{Speed measured by milepost}} \times 100(\%)$$

$$*3\ \text{Current Indicator Speed} = \frac{\text{Mile (Milepost)}}{\text{Time (sec)}} \times 3600$$

Table 2 Ship's Speed Test

	TIME	SPD (kts)	REMARKS		TIME	SPD (kts)	REMARKS
	00		SHIP'S NAME ______		00		SHIP'S NAME ______
	10		DEPTH ______ (m)		10		DEPTH ______ (m)
	20				20		
	30		TEST SITE ______		30		TEST SITE ______
	40		WIND SPEED		40		WIND SPEED
	50		△ ______ (m/s)		50		△ ______ (m/s)
	00		COURSE ______		00		COURSE ______
	10				10		
	20				20		
	30				30		
	40				40		
	50				50		
	00				00		
	10				10		
	20				20		
	30				30		
	40				40		
	50				50		
	00				00		
	10				10		
	20				20		
	30				30		
	40				40		
	50				50		
	00				00		
	10				10		
	20				20		
	30				30		
	40				40		
	50				50		
	00				00		

Table 3 Current Display Behavior Test

SHIP'S NAME_____ TEST DATE_____ TEST SITE_____ DEPTH SETTING (m): LAYER 1 _____ , LAYER 2 _____ , LAYER 3 _____

No.	TIME	SHIP'S HDG. (deg.)	LAYER 1		LAYER 2		LAYER 3		SHIP'S SPD		WIND (Rel)		REMARKS (Depth, Sea conditions, etc.)
			DIR	SPD (kts)	DIR	SPD (kts)	DIR	SPD (kts)	F/A (kts)	L/R (kts)	DIR (deg)	SPD (m/s)	
1													
2													
3													
4													
5													
6													
7													
8													
9													
10													
1													
2													
3													
4													
5													
6													
7													
8													
9													
10													

FURUNO

構成表 COMPLETE SET	CI-80 カラー潮流計 DOPPLER SONAR CURRENT INDICATOR			
番号 No.	名称 NAME	型式 TYPE	質量 MASS (kg)	数量 Q'TY	備考 REMARKS
1	指示器 DISPLAY UNIT	CI-800		1	
2	送受信演算部 TRANSCEIVER UNIT	CI-810		1	
3	送受波器 TRANSDUCER	CI-840-10		1	10mケーブル付 WITH 10m CABLE
4	電線貫通金物 THRU-HULL PIPE	TRB-1500		*	FRP船用 FOR FRP HULL
5	船底タンク TRANSDUCER TANK	CI-822		*	FRP船用突出装備 FOR FRP HULL
6	船底タンク TRANSDUCER TANK	CI-820		*	FRP船用キール埋込 FOR FRP HULL KEEL FLUSH MOUNT
7	舷側装備タンク TRANSDUCER TANK (SIDE HULL)	CI-821		*	
8	船底タンク TRANSDUCER TANK	CI-823		*	FOR STEEL HULL
9	振動子フランジ TRANSDUCER FLANGE	OP66-3		*	
10	信号ケーブル SIGNAL CABLE	CO-SPEVV-SB -C 0.2X10P *5M*		*	

*：オプション支給品。
OPTIONAL SUPPLY.

FURUNO ELECTRIC CO., LTD.

FURUNO

構成表 COMPLETE SET	CI-80 カラー潮流計 DOPPLER SONAR CURRENT INDICATOR				
番号 No.	名称 NAME	型式 TYPE	質量 MASS (kg)	数量 Q'TY	備考 REMARKS
11	信号ケーブル SIGNAL CABLE	CO-SPEVV-SB -C 0.2X10P *10M*		*	
12	信号ケーブル SIGNAL CABLE	CO-SPEVV-SB -C 0.2X5P *5M*		*	
13	信号ケーブル SIGNAL CABLE	CO-SPEVV-SB -C 0.2X5P *10M*		*	
14	工事材料 INSTALLATION MATERIALS			式 1 SET	
15	付属品 ACCESSORIES			式 1 SET	
16	予備品 SPARE PARTS			式 1 SET	
17	THRU-HULL PIPE	TFB-5000CI		*	FOR STEEL HULL

*：オプション支給品。
OPTIONAL SUPPLY.

FURUNO ELECTRIC CO., LTD.

FURUNO

CODE NO.	006-900-530	66AN-X-9401-3
TYPE	CP66-01110	

工事材料表 INSTALLATION MATERIALS	CI-800 CI-900 指示器 DISPLAY UNIT	

番号 No.	名称 NAME	略図 OUTLINE	型名／規格 DESCRIPTIONS	数量 Q'TY	用途／備考 REMARKS
1	コネクタ CONNECTOR	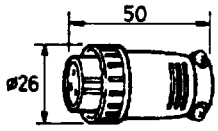	NJC-203-PF CODE NO. 000-506-703	1	
2	コネクタ CONNECTOR	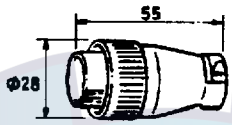	SRCN6A21-16P CODE NO. 000-508-664	1	
3	+トラスタッピングネジ TAPPING SCREW	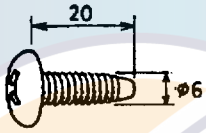	6X20 SUS304 1シュ CODE NO. 000-802-084	4	
			CODE NO.		
			CODE NO.		
			CODE NO.		
			CODE NO.		
			CODE NO.		
			CODE NO.		
			CODE NO.		

CI-80/90

（略図の寸法は、参考値です。）

図番 (1/1)
DWG. NO. C7239-M02-D

FURUNO ELECTRIC CO., LTD

FURUNO

CODE NO.	006-900-540	66AN-X-9402-3
TYPE	CP66-01120	

工事材料表 INSTALLATION MATERIALS	CI-810	送受信演算装置 TRANSCEIVER/PROCESSOR UNIT	

番号 No.	名称 NAME	略図 OUTLINE	型名／規格 DESCRIPTIONS	数量 Q'TY	用途／備考 REMARKS
1	コネクタ CONNECTOR	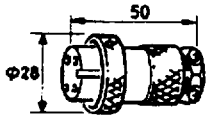	NCS-258-P CODE NO. 000-506-513	1	
2	コネクタ CONNECTOR	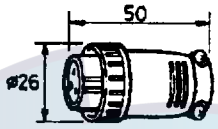	NJC-203-PF CODE NO. 000-506-703	1	
3	コネクタ CONNECTOR	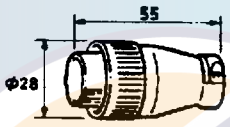	SRCN6A21-16P CODE NO. 000-508-664	1	
4	コネクタ CONNECTOR	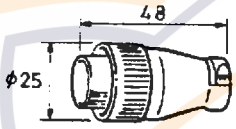	SRCN6A16-10P CODE NO. 000-508-663	1	
5	圧着端子 CRIMP-ON LUG	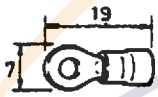	FV1.25-M3 アカ RED CODE NO. 000-538-110	24	
6	アース銅板 COPPER STRAP		04S40801 (30X1200X0.3) CODE NO. 000-572-187	1	
			CODE NO.		
			CODE NO.		
			CODE NO.		
			CODE NO.		

CI-80/90

（略図の寸法は、参考値です。）

図番 DWG. NO. C7239-M01-D (1/1)

FURUNO ELECTRIC CO., LTD

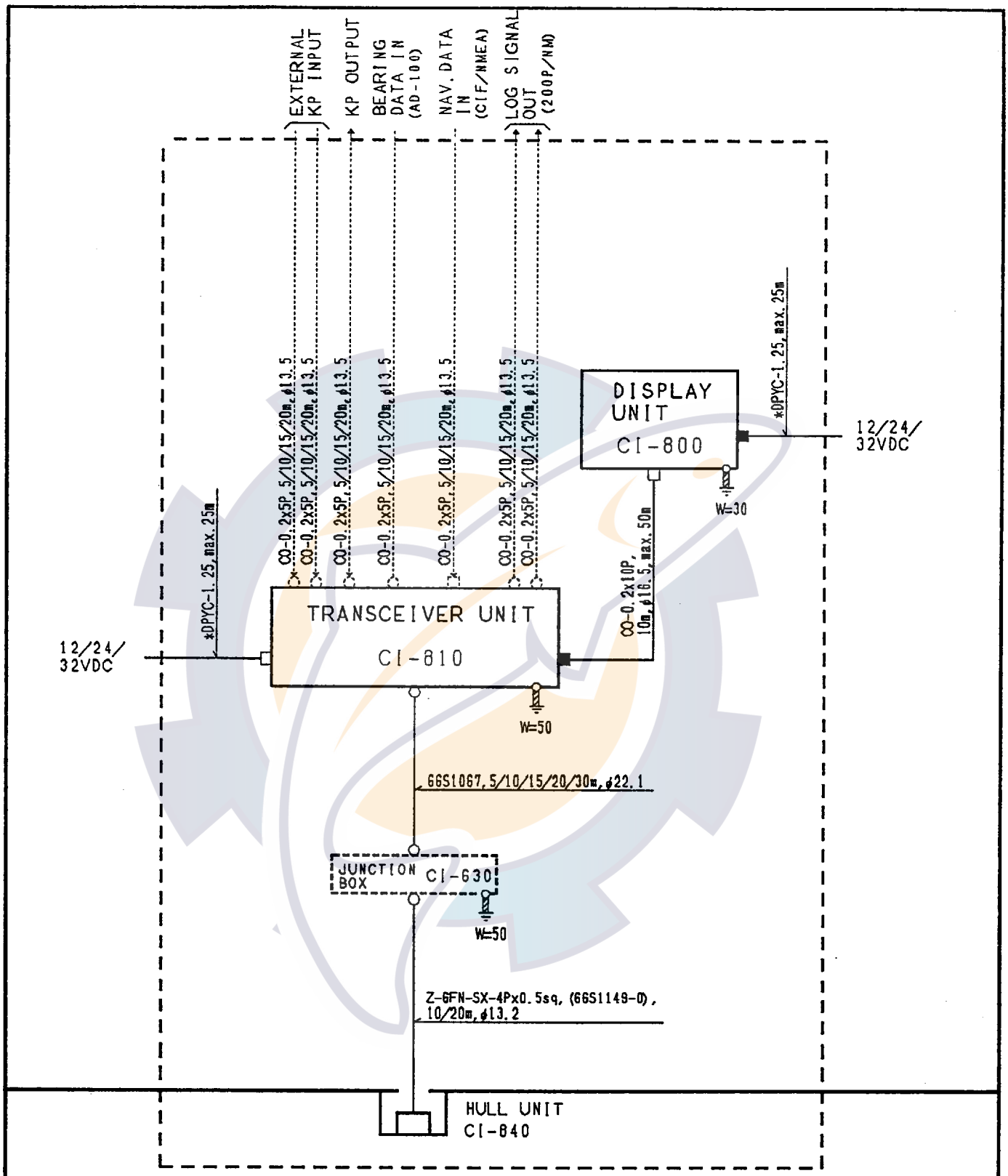

CI-80 DOPPLER SONAR CURRENT INDICATOR

NOTE

* : SHIPYARD SUPPLY
: CONNECTOR (: FACTORY-FITTED)
: CRIMP-ON LUG (: FACTORY-FITTED)
: GROUNDING COPPER STRAP
: GROUNDING WIRE IV-8sq.
: CABLE SUPPLY SIDE
---: OPTIONAL SUPPLY

CO-0.2x2P: CO-SPEVV-SB-C 0.2x2P,ϕ10.5
CO-0.2x5P: CO-SPEVV-SB-C 0.2x5P,ϕ13.5
CO-0.2x10P: CO-SPEVV-SB-C 0.2x10P,ϕ16.5

APPROVED	Sep.19,'94 K.Ota	TITLE CI-80 DOPPLER SONAR CURRENT INDICATOR
CHECKED	Sep.19,'94 K.Kusunoki	
DRAWN	Sep.19,'94 H.Yoshioka	DWG.NO. E7239D01B000

FURUNO

注　記

1）装備ケーブルはサービス時、指示部を前方に充分引き出せるよう余裕を持たせること。
2）装備ケーブルの端末処理は装備要領書参照のこと。
3）取付用ネジはＭ１０ボルトまたはコーチボルト呼び径９を使用のこと。
4）#印寸法は最小サービス空間寸法とする。
5）指定外寸法公差は表１による。

NOTE

1. KEEP ENOUGH CABLE LENGTH BEHIND UNIT.
2. REFER TO INSTALLATION INSTRUCTIONS FOR CABLE TERMINATION SETTING.
3. USE M10 BOLTS OR φ9 CORCH SCREWS FOR FIXING UNIT.
4. #: RECOMMENDED SERVICE CLEARANCE.
5. TABLE 1 INDICATES TOLERANCE OF DIMENSIONS.

範　囲 DIMENSION	公差 TOL.
L≦50	±1mm
50<L≦100	±2mm
100<L≦500	±3mm

表1　TABLE 1

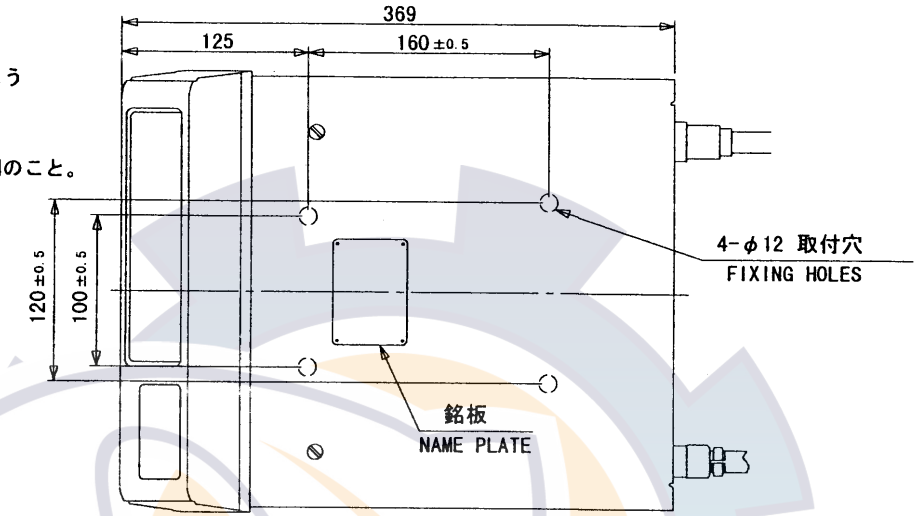

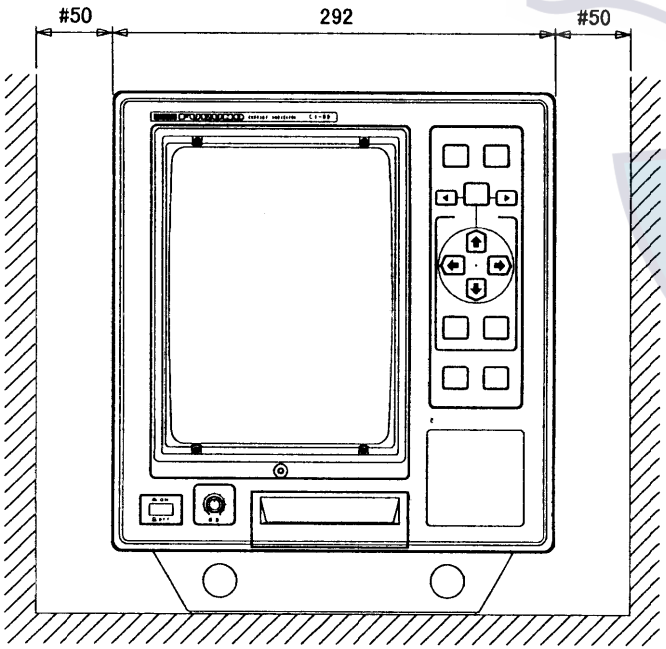

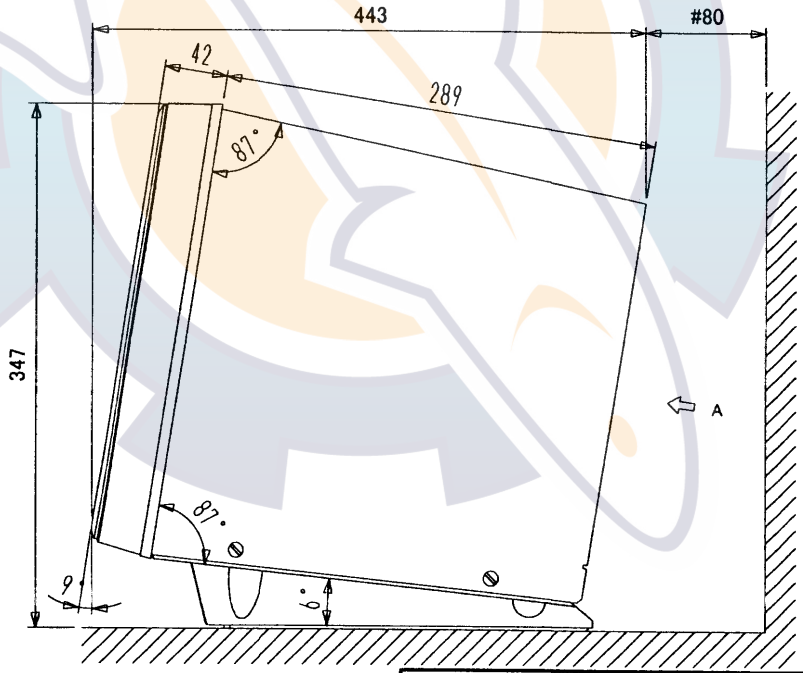

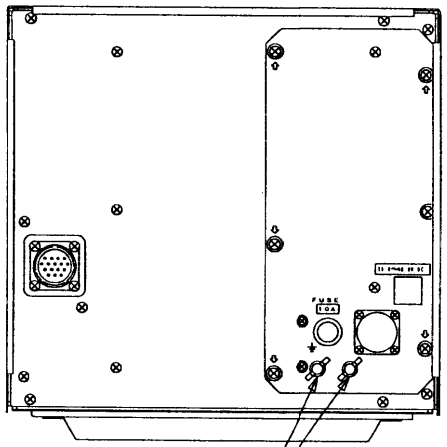

DRAWN Oct 16 '98 T.YAMASAKI		TITLE	CI-800
CHECKED Oct 19 '98 K.Kusunoki		名称	指示器
APPROVED Oct 19 '98 K.Kusunoki	CI-80		外寸図
SCALE 1/5 MASS 13 kg		NAME	DISPLAY UNIT
DWG. No. C7239-G01- D	66-021-1000-G1		OUTLINE DRAWING

FURUNO ELECTRIC CO., LTD.

D-1

FURUNO

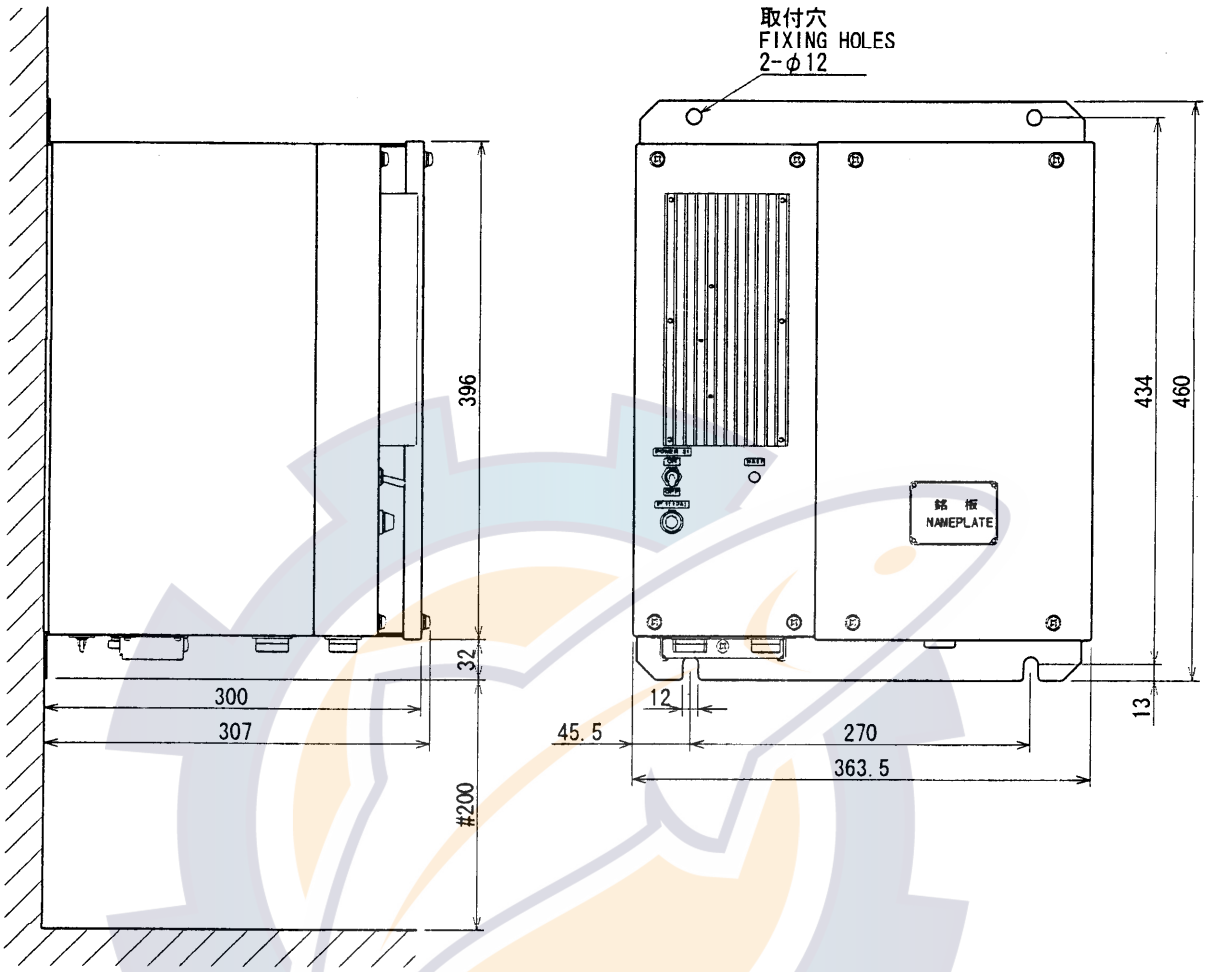

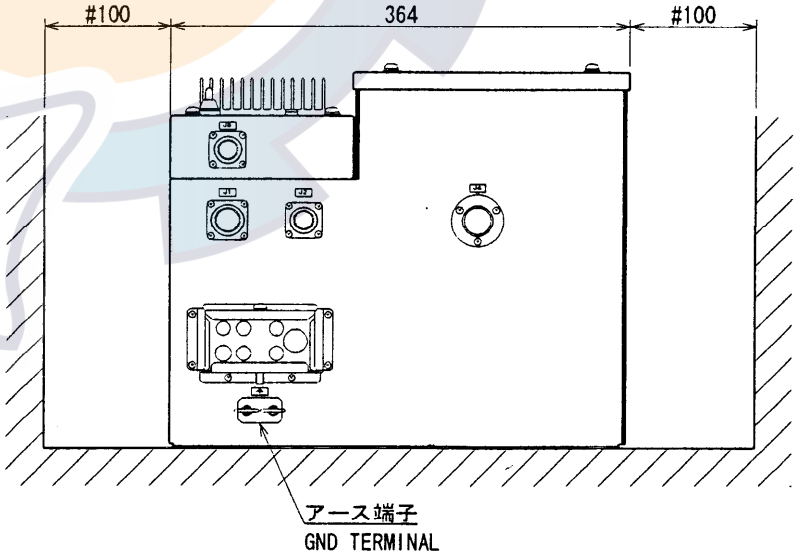

表１　TABLE 1

寸法区分(mm) DIMENSION	公差(mm) TOLERANCE
0 ＜ L ≦ 50	±1.5
50 ＜ L ≦ 100	±2.5
100 ＜ L ≦ 500	±3

注記

１）指定なき寸法公差は表１による。

２）＃：推奨する最小サービス空間寸法。

NOTE

1. TABLE 1 INDICATES TOLERANCE OF DIMENSIONS.
2. #: RECOMMENDED SERVICE CLEARANCE.

DRAWN Nov 8 '00 T.YAMASAKI			TITLE CI-810
CHECKED Nov 9 '00 Y.Kawai			名称 送受信演算装置
APPROVED Nov 9 '00 Y.Kawai			外寸図
SCALE 1/6	MASS ±10% 16.0kg		NAME TRANSCEIVER UNIT
DWG. No. C7239-G02- D		66-021-2000-G	OUTLINE DRAWING

FURUNO ELECTRIC CO., LTD.

FURUNO

D - 3

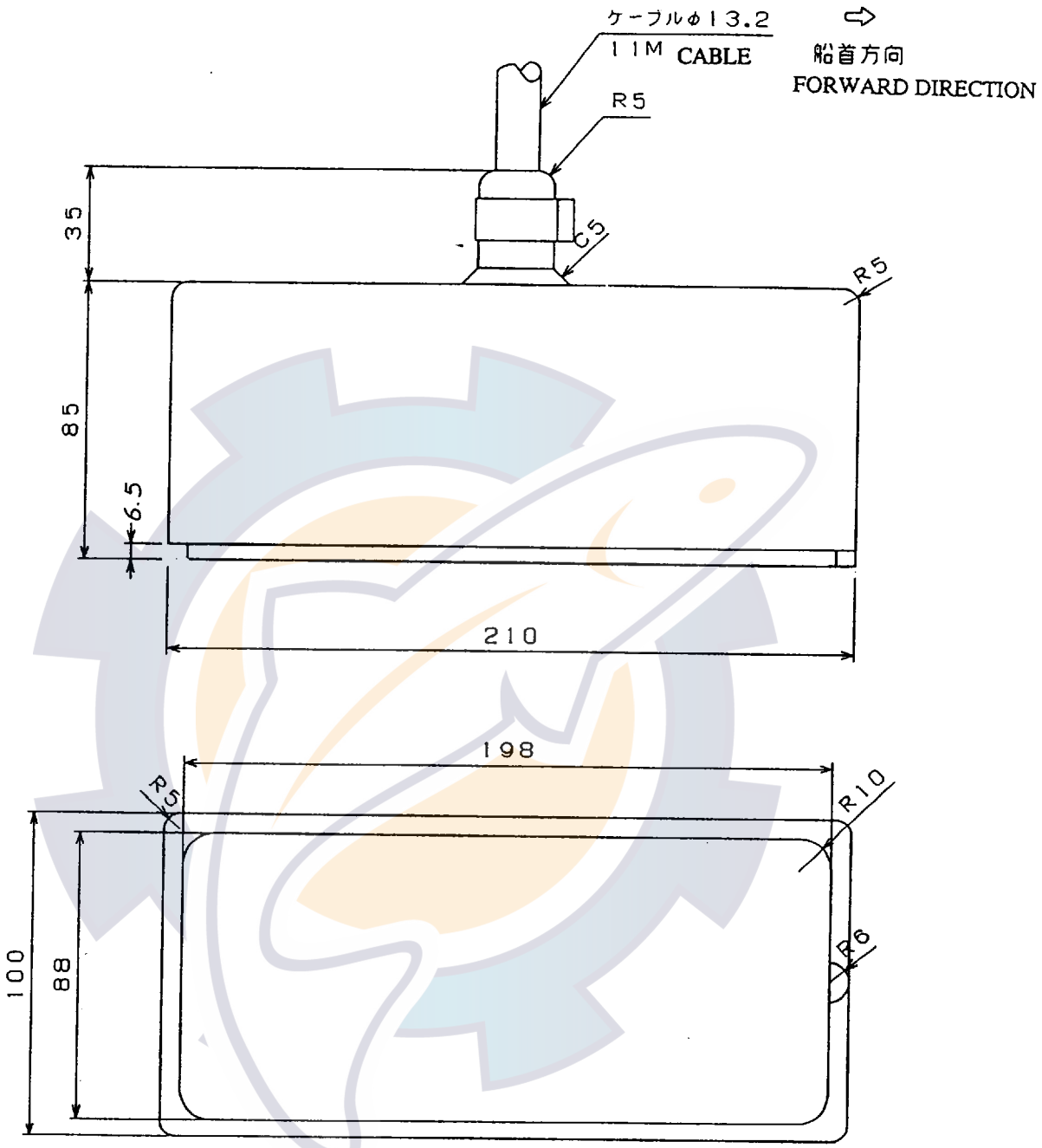

REMARKS
質量はケーブル重さを
ふくまず

Note: Mass w/o cable.

DRAWN Aug 22 '97 T. YAMASAKI			TYPE CI-840
CHECKED AUG 25 '97 K. Kusunoki			名称 送受波器
APPROVED Aug 25 '97 T. Yamaguchi	CI-80		外寸図
SCALE 1/2 / MASS 2.9 kg	APPLICABLE TO; (MODEL)	BLOCK NO.	NAME TRANSDUCER
DWG NO. C7239-G03- E	66-021-3000- G0		OUTLINE DRAWING

FURUNO

D - 4

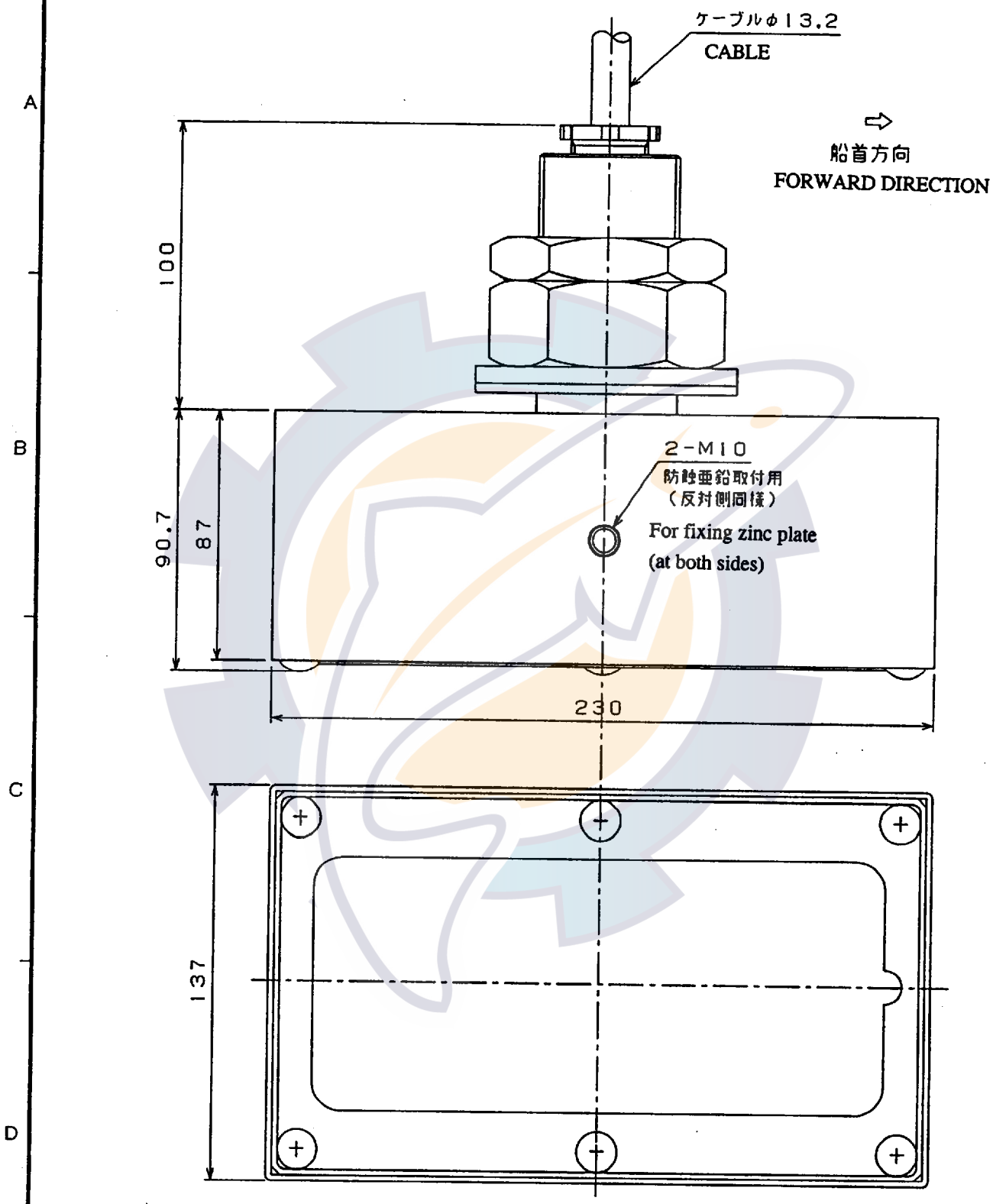

REMARKS				TYPE CI-820
				名称 船底装備
DRAWN T.Y	APPROVED DEC27'99 IKEDA	CI-80		NAME TRANSDUCER TANK(BOTTOM HULL)
SCALE 1/2	MASS 7.2 kg	APPLICABLE TO: (MODEL)	BLOCK NO.	DWG NO. C7239-G04- C

FURUNO ELECTRIC CO., LTD.

FURUNO

D - 5

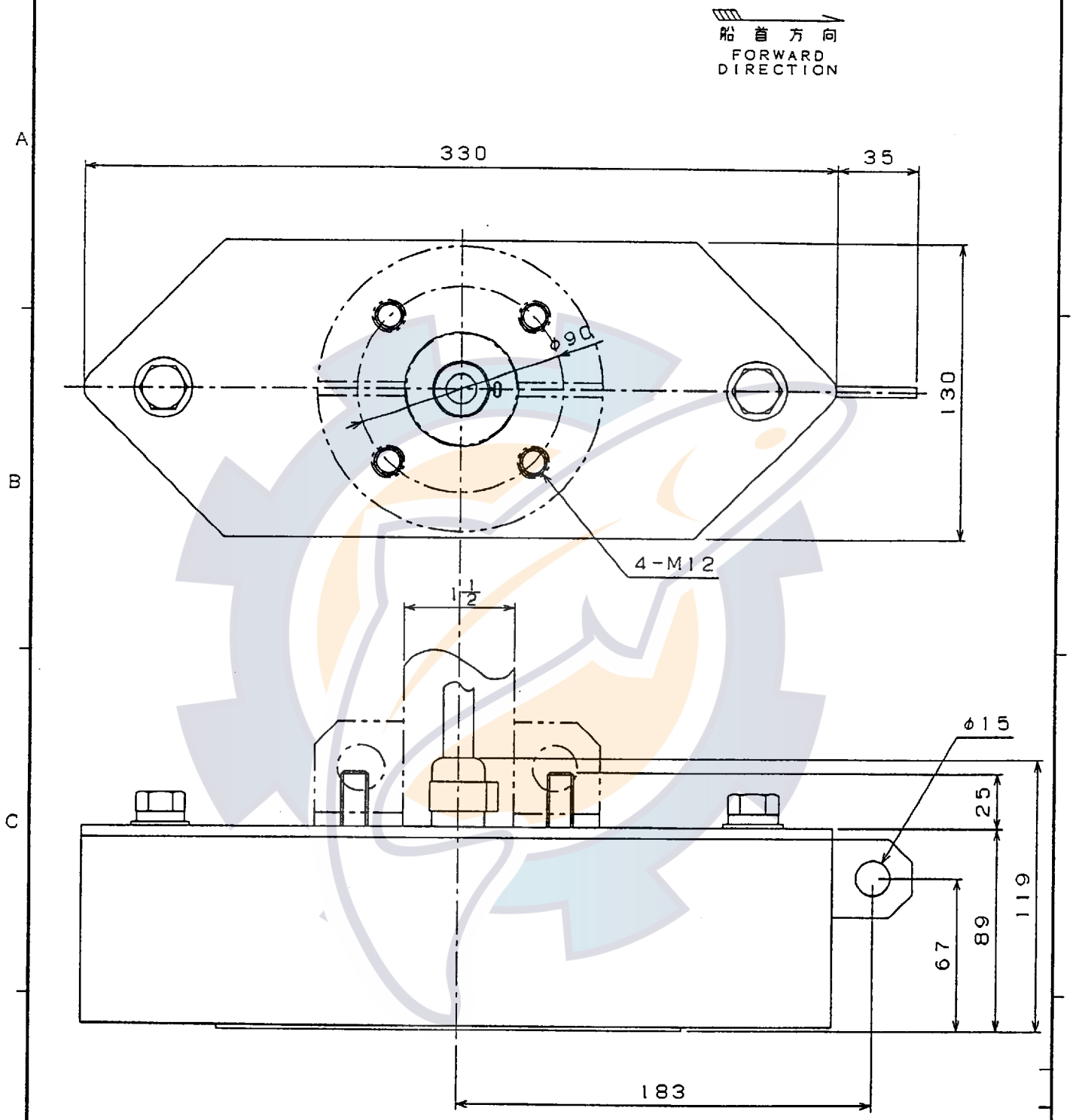

REMARKS			TYPE CI-821
			名称 舷側装備
DRAWN T.Y	APPROVED IKEDA July 29 '99	CI-80	NAME TRANSDUCER TANK(SIDE HULL)
SCALE /	MASS kg	APPLICABLE TO: (MODEL) / BLOCK NO.	DWG NO. C7239-G05- C

FURUNO

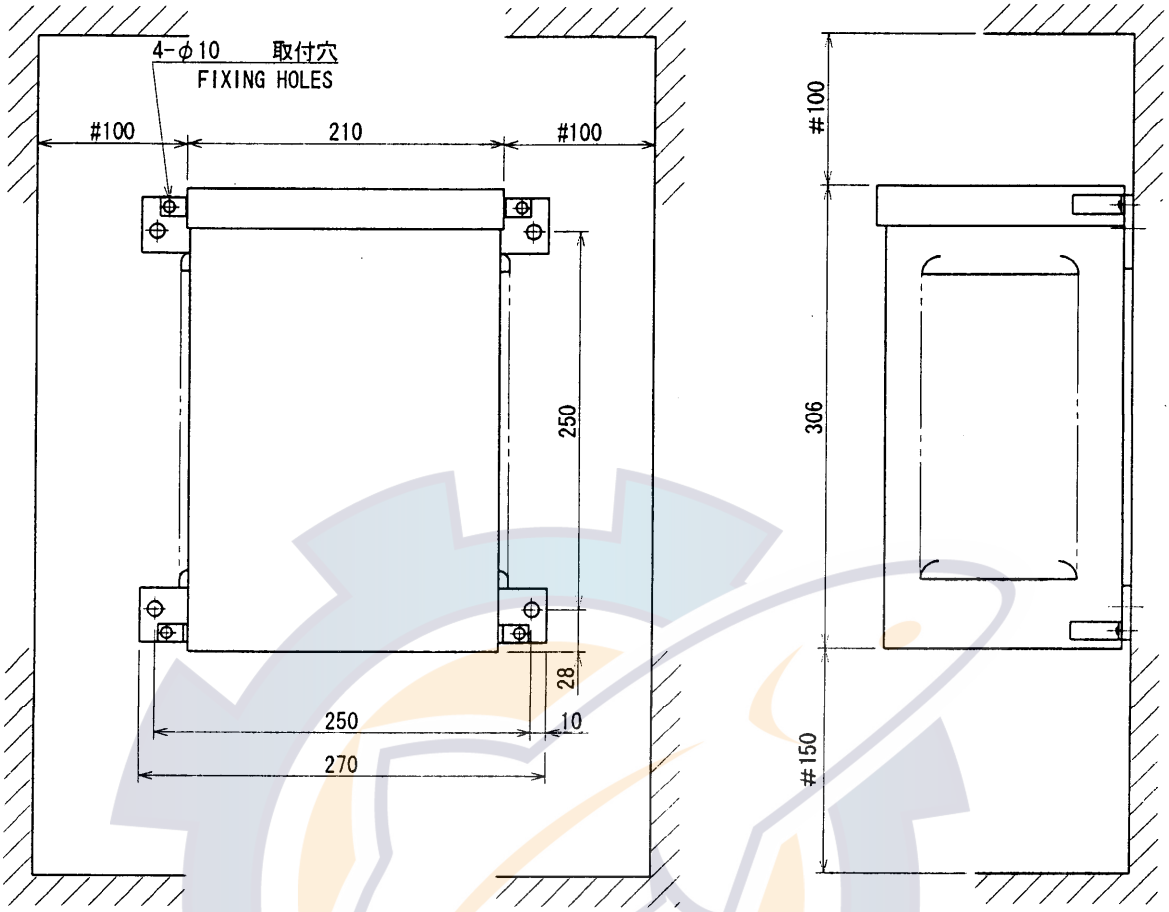

NOTE 1. #：推奨サービス空間
RECOMMENDED SERVICE CLEARANCE.

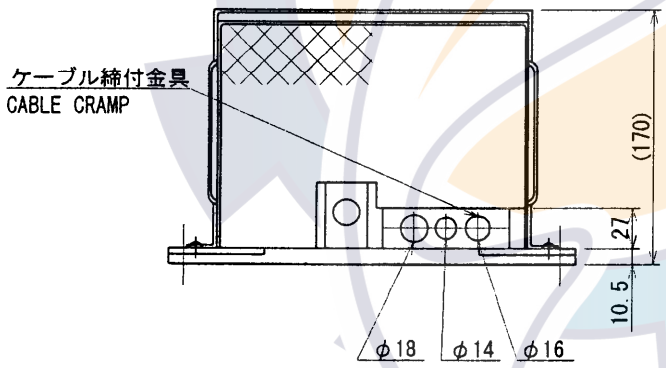

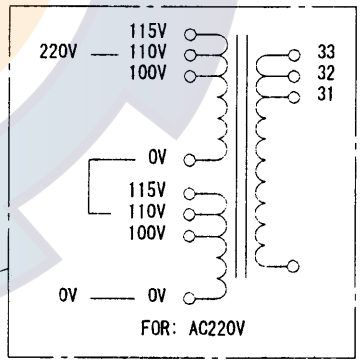

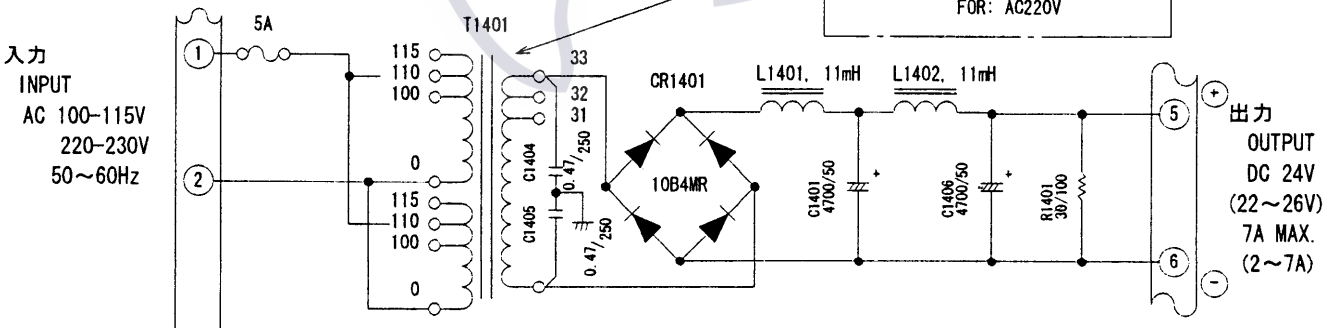

注記 AC220V 入力に対しては T1401の一次巻線を直列に接続する。
NOTE FOR 220V AC INPUT. CONNECT T1401 PRIMARY WINDINGS IN SERIES.

DRAWN Aug 16 '00 T.YAMASAKI		TITLE	RU-3423
CHECKED Aug 17 '00 Y.K		名称	整流器
APPROVED Aug 17 '00 Y.K			外寸図
SCALE 1/5	MASS ±10% 16.5 kg	NAME	RECTIFIER UNIT
DWG. No. C3002-005- L			OUTLINE DRAWING

FURUNO ELECTRIC CO., LTD.

FURUNO

送受波器取付方法 INSTALLATION METHOD	T −
周波数 FREQUENCY	/ KHz

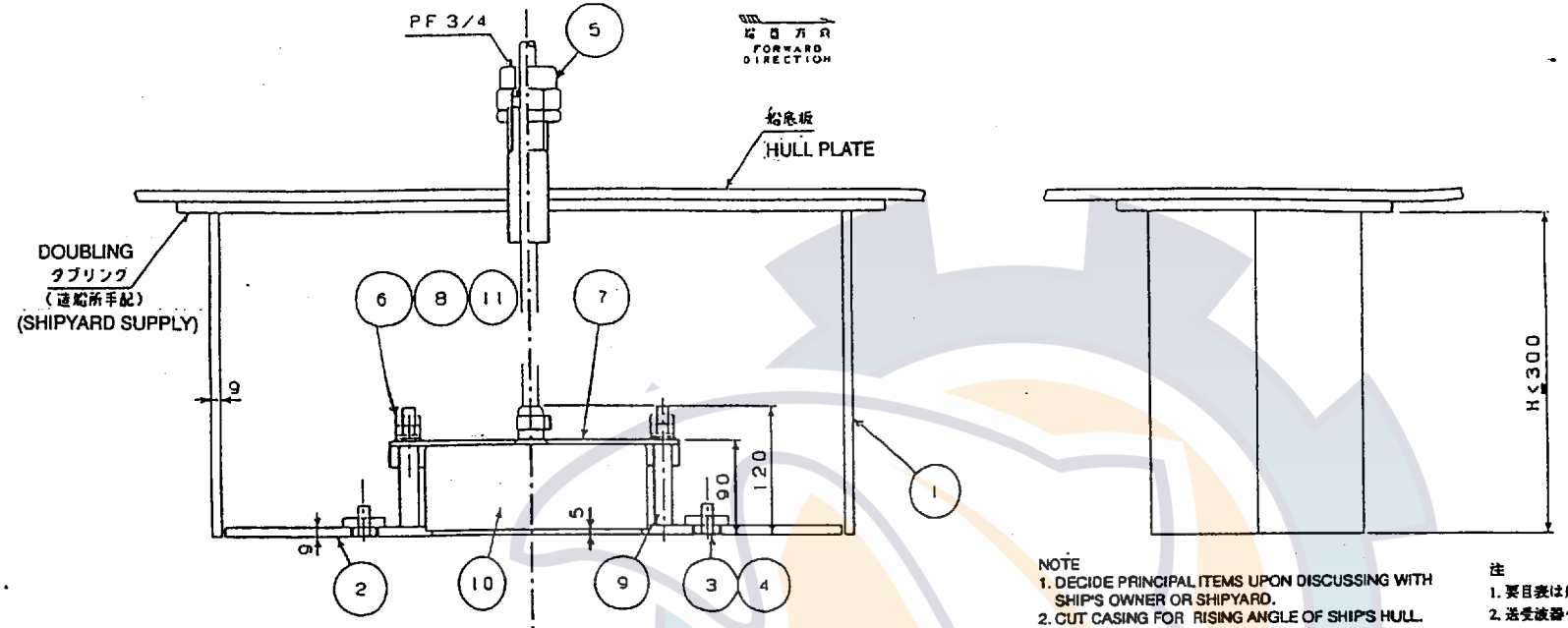

装目表 PRINCIPAL ITEMS		
装置位置 POSITION	船首から FROM BOW	
	キールから FROM KEEL	
突出量 H PROJECTION		
取付状態 FIXING CONDUITION	航行時水平 HORIZONTAL AT RUNNING	
保護タンク PROTECTION TANK		

NOTE
1. DECIDE PRINCIPAL ITEMS UPON DISCUSSING WITH SHIP'S OWNER OR SHIPYARD.
2. CUT CASING FOR RISING ANGLE OF SHIP'S HULL.
3. ALLOW ENOUGH CLEARANCE AROUND THRU-HULL PIPE FOR EASY TIGHTENING AND SERVICING.
4. DO NOT COAT TRANSDUCER FACE.
5. MAKE SURE THE FORE DIRECTION OF THE CASING.
6. THE FACE OF TRANSDUCER SHOULD BE PARALLEL WITH THE WATERLINE WHEN SAILING.

注
1. 要目表は船主又は造船所と協議の上、記入して下さい。
2. 送受波器ケースは船底傾斜角に合わせて切断して下さい。
3. 貫通金物はフレーム等に当たらない場所で、締付用ナット、止めナットの締めつけに支障のない位置に取付けること。
4. 塗装の際、送受波器面を塗装しないこと。
5. 送受波器ケース取付の際には、船首、船尾の確認をして下さい。
6. 送受波器面が喫水に平行になる様に装備して下さい。

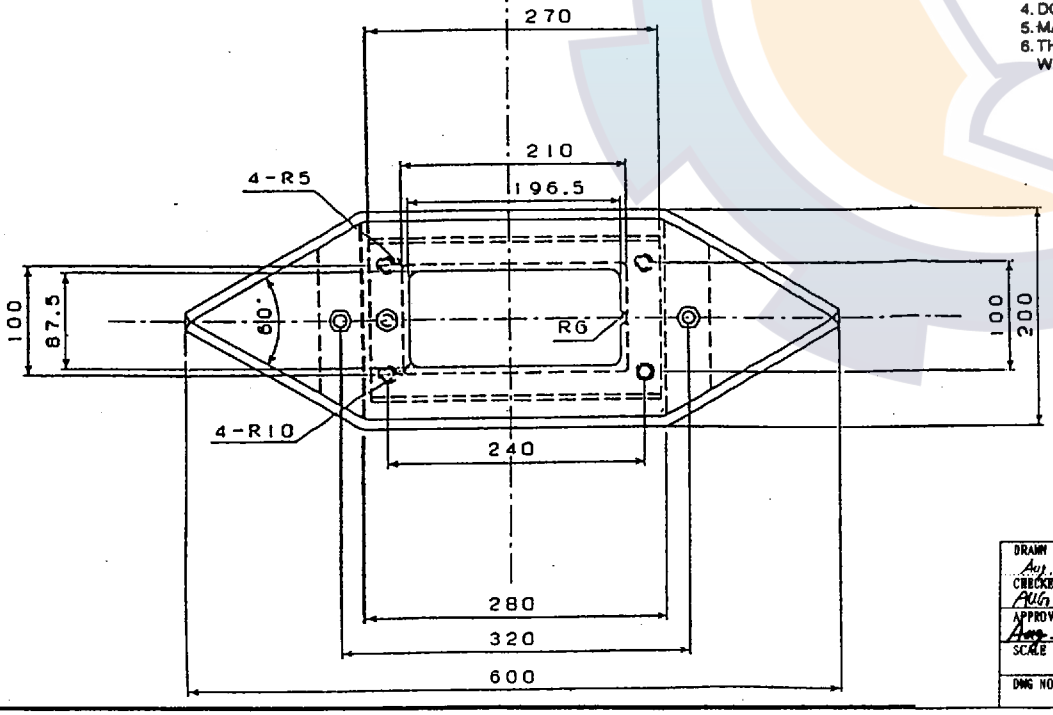

品番 ITEM	品名 NAME	材質 MATERIAL	数量 Q'TY	図番 DWG.NO.	摘要 REMARKS
11	平座金 FLAT WASHER		4		M12
10	送受波器 TRANSDUCER		1		
9	スペーサ SPACER	SGP	4	02-100-9622	
8	平座金 FLAT WASHER	SUS304	4		M12
7	押え板 FIXING PLATE	SS41	1	66-021-3402	
6	六角ナット HEX. NUT	SUS304	8		M12
5	電線貫通金物 THRU-HULL PIPE		1	TFB-5000CI	CHANGE PACKING TO VA20
4	バネ座金 SPRING WASHER	SUS304	4		M12
3	六角ボルト HEX. BOLT	SUS304	4		M12 X 40
2	送受波器取付フランジ FRANGE	SS41	1		
1	送受波器ケース CASING	SS41	1		

DRAWN Aug.22 '97 T.YAMASAKI		TYPE CI-823
CHECKED AUG 25 '97 K.KASUDA		名称 鋼船用
APPROVED Aug.25 '97 T.Yamaguchi	CI-90 CI-80	送受波器装備図
SCALE 1/5 MASS kg	APPLICABLE TO: (MODEL) BLOCK NO.	NAME FOR STEEL HULL
DWG NO. C7239-T04- C		TRANSDUCER INSTALLATION

FURUNO ELECTRIC CO., LTD.

D-7

FURUNO

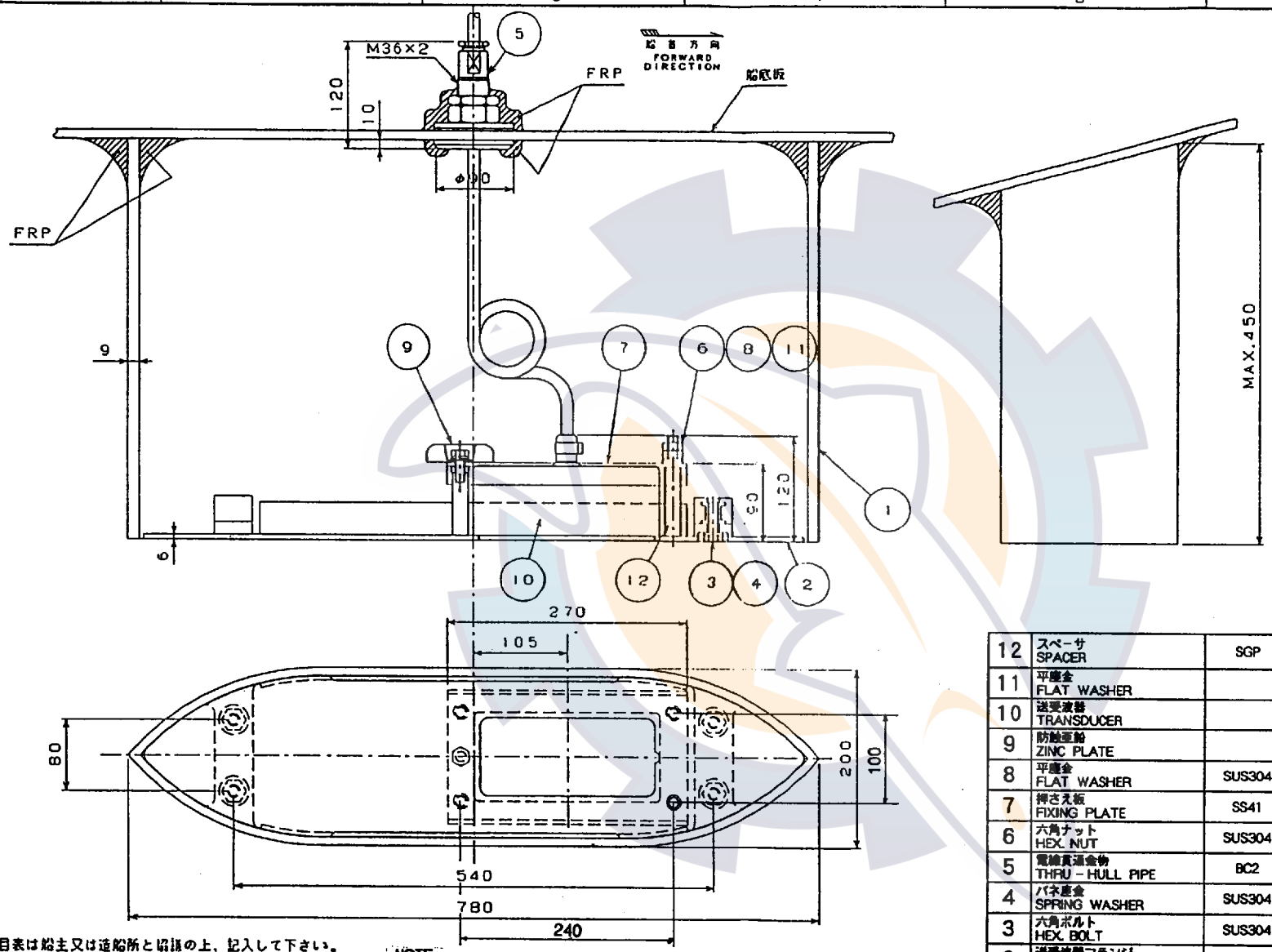

要目表 PRINCIPAL ITEMS		
船尾 POSITION	船首から FROM BOW	mm
	キールから FROM KEEL	mm
突出量 H PROJECTION		mm
取付状態 FIXING CONDUITION	走行時水平 HORIZONTAL AT RUNNING	
保護タンク PROTECTION TANK		

品番 ITEM	品名 NAME	材質 MATERIAL	数量 Q'TY	図番 DWG.NO.	摘要 REMARKS
12	スペーサ SPACER	SGP	4	66-021-3403	
11	平座金 FLAT WASHER		4		M12
10	送受波器 TRANSDUCER		1		
9	防蝕亜鉛 ZINC PLATE		1		造船所手配 SHIPYARD SUPPLY
8	平座金 FLAT WASHER	SUS304	4		M12
7	押さえ板 FIXING PLATE	SS41	1	66-021-3402	
6	六角ナット HEX. NUT	SUS304	8		M12
5	電線貫通金物 THRU-HULL PIPE	BC2	1	TRB-1500	
4	バネ座金 SPRING WASHER	SUS304	4		M12
3	六角ボルト HEX. BOLT	SUS304	4		M12 X 40
2	送受波器フランジ FRANGE	SS41	1	66-021-3401	
1	送受波器ケース CASING	FRP	1	66-017-1301	

注.
1. 要目表は船主又は造船所と協議の上、記入して下さい。
2. 送受波器ケースは船底傾斜角に合わせて切断して下さい。
3. 貫通金物はフレーム等に当たらない場所で、締付用ナット、止めナットの締付けに支障のない位置に取付けること。
4. 貫通金物は船内外両面ともFRP成形すること。
5. 送受波器ケース取付の際には船首、船尾の確認をして下さい。
6. 送受波器面が吃水に平行になるように装備して下さい。
7. 塗装の際、送受波器面を塗装しないこと。
8. 送受波器ケースは内面もFRP成形すること。

NOTE
1. DESIDE PRINCIPAL ITEMS UPON DISCUSSING WITH SHIP'S OWNER OR SHIPYARD.
2. CUT CASING FOR RISING ANGLE OF SHIP'S HULL.
3. ALLOW ENOUGH CLEARANCE AROUND THRU-HULL PIPE FOR EASY TIGHTENING AND SERVICING.
4. USE FRP TO INSIDE AND OUTSIDE TO CONSTRUCT THRU-HULL PIPE.
5. MAKE SURE THE FORE DIRECTION OF THE CASING.
6. THE FACE OF TRANSDUCER SHOULD BE PARALLEL WITH THE WATERLINE WHEN SAILING.
7. DO NOT COAT TRANSDUCER FACE.
8. USE FRP WITHIN TRANSDUCER TO CONSTRUCT IT.

REMARKS			TYPE CI-822
DRAWN T.Y	APPROVED July 29 '94 IKEDA	CI-80	名称 送受波器装備図 NAME TRANSDUCER INSTALLATION
SCALE	MASS — kg	APPLICABLE TO: (MODEL)	BLOCK NO.	DWG NO. C7338-T03- C

D-8

FURUNO

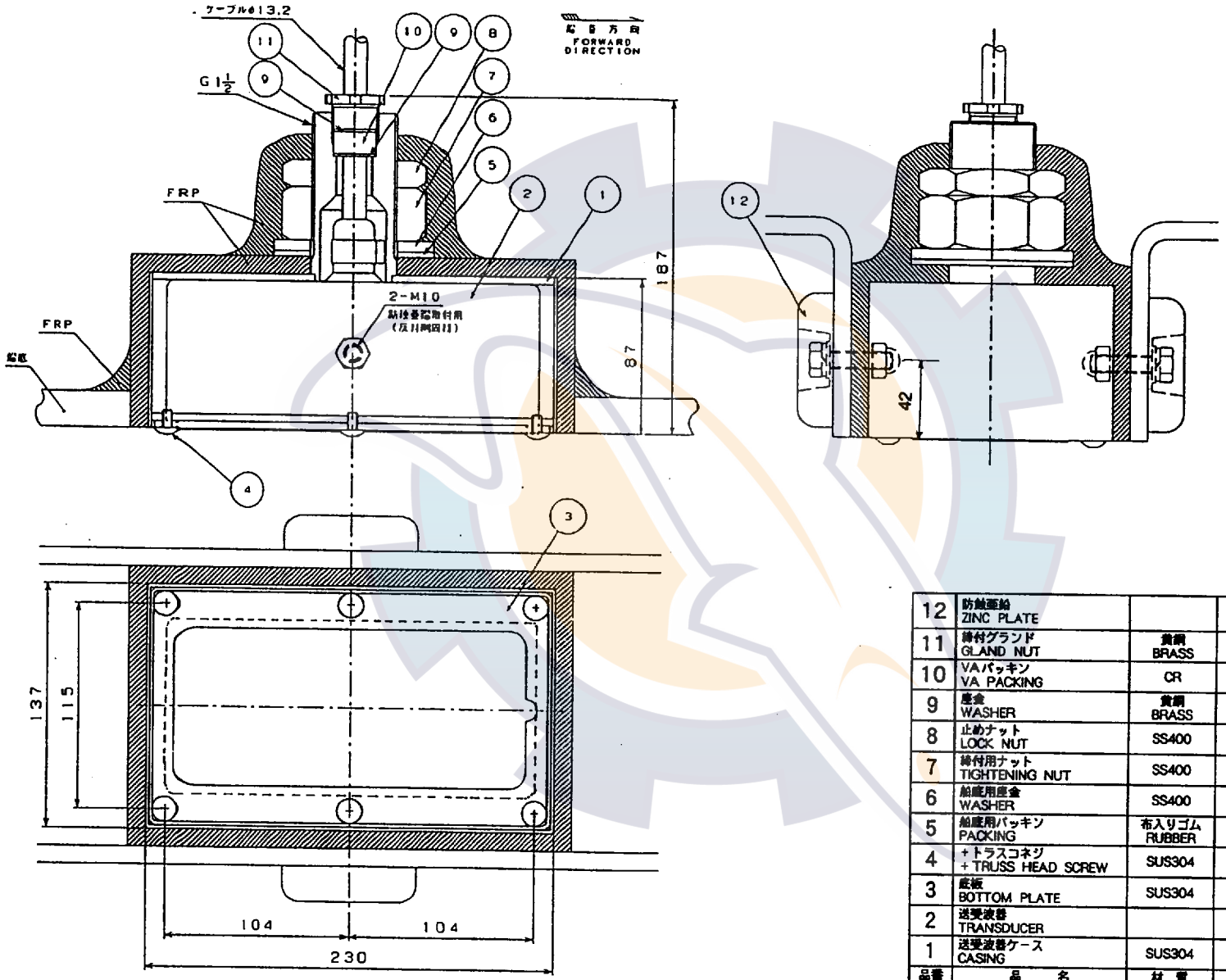

要目表 PRINCIPAL ITEMS		
設置位置 POSITION	船首から FROM BOW	
	キールから FROM KEEL	
突出量 H PROJECTION		
取付状態 FIXING CONDUITION		走行時水平 HORIZONTAL AT RUNNING
後部タンク PROTECTION TANK		

ITEM 品番	NAME 品名	MATERIAL 材質	Q'TY 数量	DWG.NO. 図番	REMARKS 備考
12	防蝕亜鉛 ZINC PLATE		2		造船所手配 SHIPYARD SUPPLY
11	締付グランド GLAND NUT	黄銅 BRASS	1	JISF8801 20	
10	VAパッキン VA PACKING	CR	1	VA20	
9	座金 WASHER	黄銅 BRASS	2	JISF8801 20C	
8	止めナット LOCK NUT	SS400	1	66-021-3205	
7	締付用ナット TIGHTENING NUT	SS400	1	66-021-3204	
6	船底用座金 WASHER	SS400	1	66-021-3203	
5	船底用パッキン PACKING	布入りゴム RUBBER	1	66-021-3206	
4	+トラスコネジ +TRUSS HEAD SCREW	SUS304	6	M6 X 10	TB2361 35CPS
3	底板 BOTTOM PLATE	SUS304	1	66-021-3202	
2	送受波器 TRANSDUCER		1		
1	送受波器ケース CASING	SUS304	1	66-021-3101	

注.
1. 要目表は船主又は造船所と協議の上、記入して下さい。
2. グランド部がフレーム等に当たらない場所で、締付用ナット、止めナットの締付けに支障のない位置に取付けること。
3. 送受波器ケース取付の際には船首、船尾の確認をして下さい。
4. 送受波器面が吃水に平行になる様に装備して下さい。
5. 塗装の際、送受波器面を塗装しないこと。

NOTE
1. DESIDE PRINCIPAL ITEMS UPON DISCUSSING WITH SHIP'S OWNER OR SHIPYARD.
2. ALLOW ENOUGH CLEARANCE AROUND THRU-HULL PIPE TO EASE TIGHTENING AND SERVICING.
3. MAKE SURE THE FORE DIRECTION OF THE CASING.
4. THE FACE OF TRANSDUCER SHOULD BE PARALELL WITH THE WATERLINE WHEN SAILING.
5. DO NOT COAT TRANSDUCER FACE.

REMARKS			TYPE CI-820
			名称 送受波器装備図
DRAWN T.Y	APPROVED July 29 94 Ikeda	CI-80	NAME TRANSDUCER INSTALLATION
SCALE ∝	MASS — kg	APPLICABLE TO: (MODEL) / BLOCK NO.	DWG NO.

D-9

FURUNO

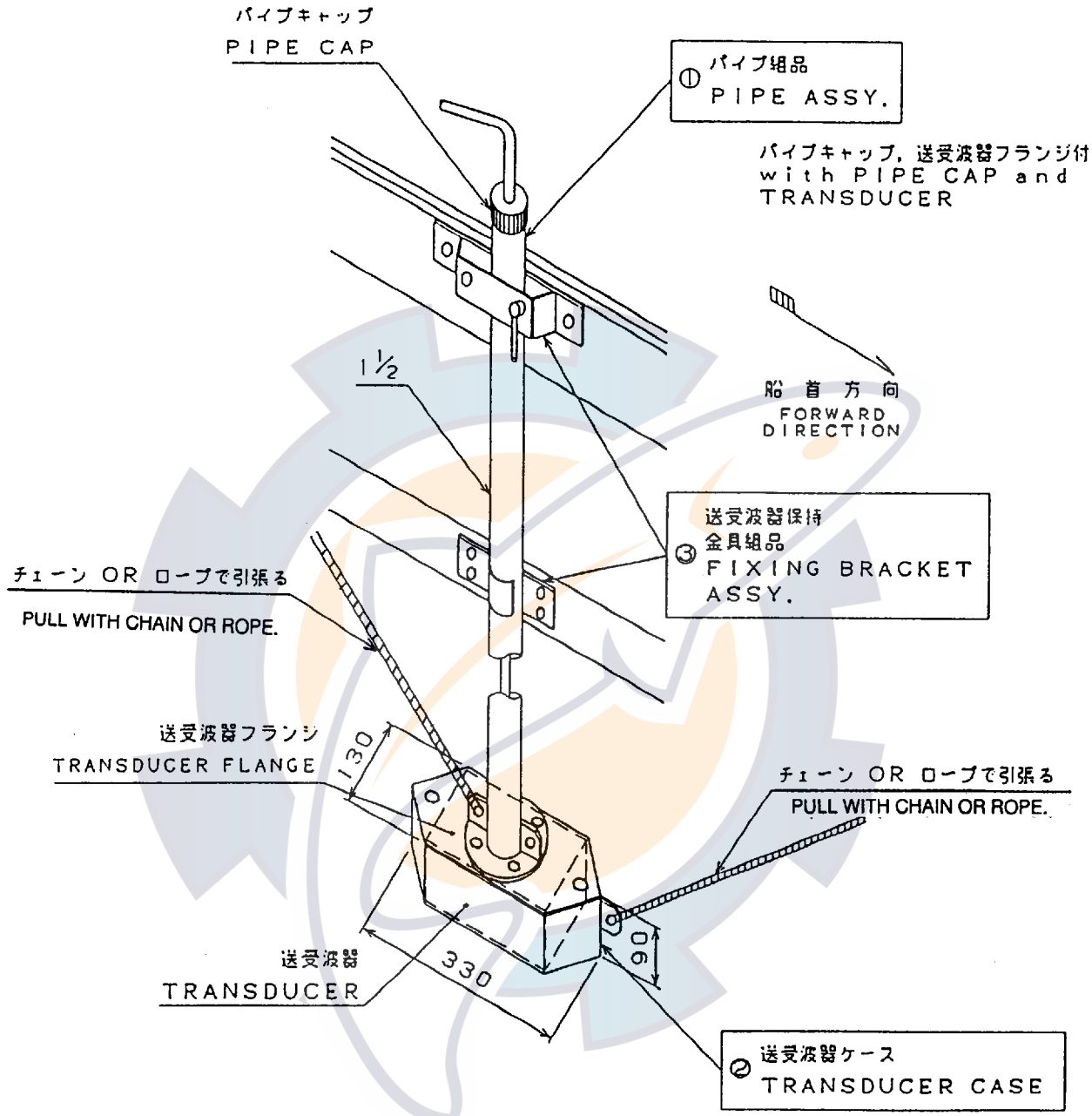

注．1．送受波器ケース取付けの際には船首、船尾の確認をしてキールと平行になるようにしてください。
2．送受波器面がキールより下になる様に装備して下さい。
3．送受波器面が吃水に平行になる様に装備して下さい。

NOTE

1. INSTALL THE TRANSDUCER CASE SO AS TO BE PARALLEL WITH KEEL.
2. MAKE SURE THE FACE OF TRANSDUCER SHOULD BE UNDER KEEL.
3. THE FACE OF TRANSDUCER SHOULD BE PARALLEL WITH THE WATERLINE WHEN SAILING.

REMARKS				TYPE CI-821	
				名称 舷側取付治具装備図	
DRAWN T.Y	APPROVED July 29 '94 Ikeda	CI-80		NAME TRANSDUCER INSTALLATION	
SCALE 1/10	MASS — kg	APPLICABLE TO: (MODEL)	BLOCK NO.	DWG NO. C7239-T03-	C

済

FURUNO

S-1

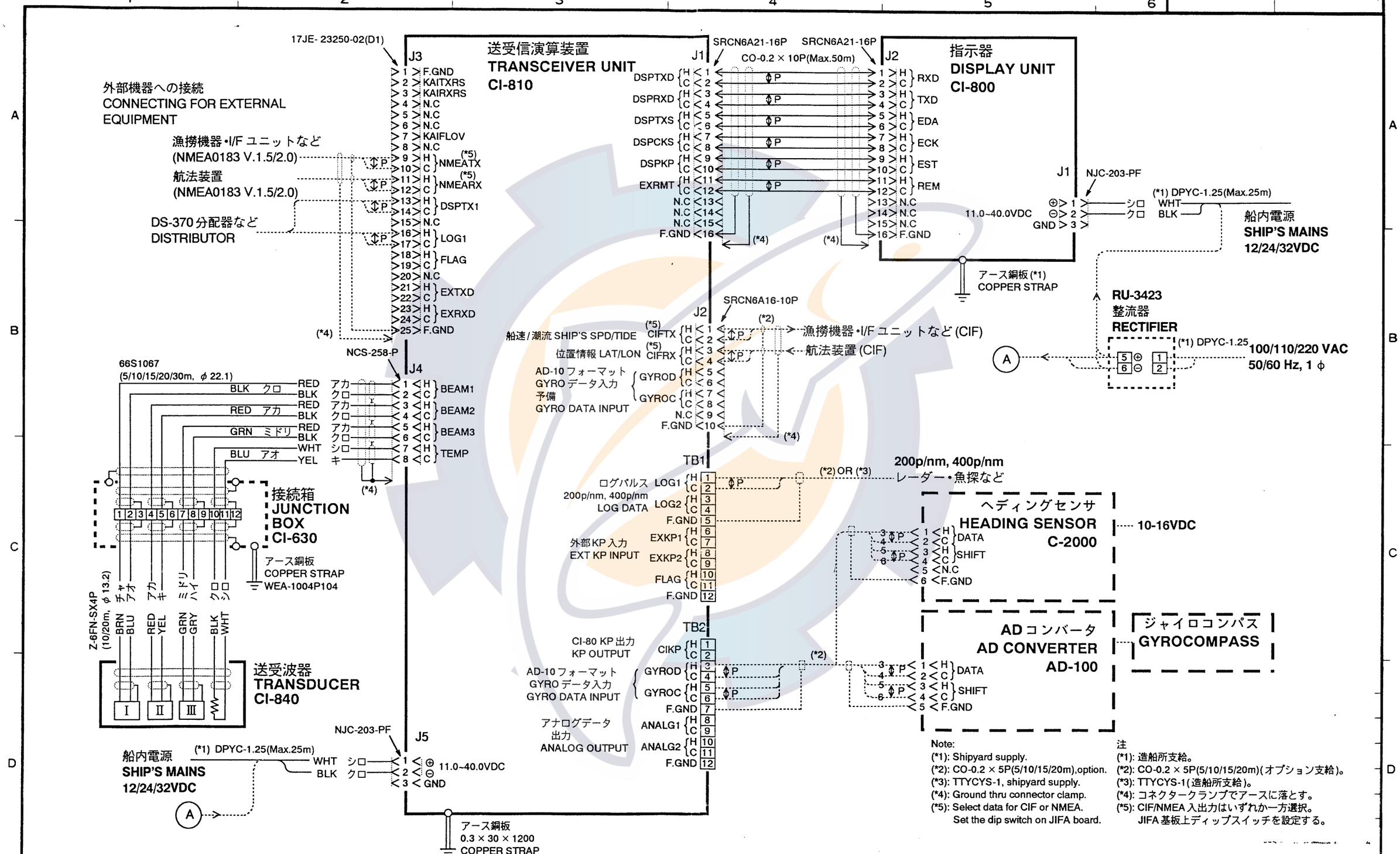

Note:
(*1): Shipyard supply.
(*2): CO-0.2 × 5P(5/10/15/20m),option.
(*3): TTYCYS-1, shipyard supply.
(*4): Ground thru connector clamp.
(*5): Select data for CIF or NMEA. Set the dip switch on JIFA board.

注
(*1): 造船所支給。
(*2): CO-0.2 × 5P(5/10/15/20m)(オプション支給)。
(*3): TTYCYS-1(造船所支給)。
(*4): コネクタークランプでアースに落とす。
(*5): CIF/NMEA 入出力はいずれか一方選択。JIFA 基板上ディップスイッチを設定する。

DRAWN J. Yamasaki JUN. 27 '95			TYPE CI-80
CHECKED JUN. 27 '95 TAKAHASHI			名称 カラー潮流計
APPROVED JUN. 28 '95 K OKAMOTO	CI-80		NAME DOPPLER SONAR CUR. INDICATOR
SCALE —	MASS — kg	APPLICABLE TO: (MODEL)	BLOCK NO.	DWG NO. C7239-C01- B

FURUNO ELECTRIC CO., LTD.